This document is not an API Standard; it is under consideration within an API technical committee but has not received all approvals required to become an API Standard. It shall not be reproduced or circulated or quoted, in whole or in part, outside of API committee activities except with the approval of the Chairman of the committee having jurisdiction and staff of the API Standards Dept. Copyright API. All rights reserved.

Venting Atmospheric and Low-pressure Storage Tanks

API STANDARD 2000

EIGHTH EDITION, XXXXXXXXXXXX 202X

IOGP Publication Statement

This document has been prepared as part of IOGP's standards development activity and is published without restriction on reproducing, copying, or creating derivative works provided such reproductions, copies, and/or derivative works do not refer to the American Petroleum ("API") and/or IOGP, including use of those parties' respective trademarks, or claim any association, affiliation, or sponsorship by or with, the American Petroleum Institute or IOGP.

Whilst every effort has been made to ensure the accuracy of the information contained in this document, API and IOGP expressly disclaim all warranties, including any implied warranties of fitness for a particular purpose or merchantability, and neither API or IOGP, nor any of their members past present or future, warrants its accuracy or will, regardless of its or their negligence, assume liability for any foreseeable or unforeseeable use made thereof, which liability is hereby excluded. Consequently, such use is at the recipient's own risk on the basis that any use by the recipient constitutes agreement to the terms of this disclaimer. The recipient is obliged to inform any subsequent recipient of such terms.

This document is not an API Standard; it is under consideration within an API technical committee but has not received all approvals required to become an API Standard. It shall not be reproduced or circulated or quoted, in whole or in part, outside of API committee activities except with the approval of the Chairman of the committee having jurisdiction and staff of the API Standards Dept. Copyright API. All rights reserved.

BALLOT DRAFT

Introduction

This standard has been developed from the accumulated knowledge and experience of qualified engineers of the petroleum, petrochemical, chemical, general bulk liquid storage, and natural gas industries.

Engineering studies of a particular tank can indicate that the appropriate venting capacity for the tank is not the venting capacity estimated in accordance with this standard. The many variables associated with tank-venting requirements make it impractical to set forth definite, simple rules that are applicable to all locations and conditions.

In this standard, where practical, US Customary (USC) units are included in parentheses or in separate tables, for information.

This document is not an API Standard; it is under consideration within an API technical committee but has not received all approvals required to become an API Standard. It shall not be reproduced or circulated or quoted, in whole or in part, outside of API committee activities except with the approval of the Chairman of the committee having jurisdiction and staff of the API Standards Dept. Copyright API. All rights reserved.

1 Scope

This standard covers the normal and emergency vapor venting requirements for aboveground liquid petroleum or petroleum products storage tanks and aboveground and underground refrigerated storage tanks designed for operation at pressures from full vacuum through 103.4 kPa (ga) (15 psig). Discussed in this standard are:

- causes of overpressure and vacuum;
- determination of venting requirements;
- means of venting;
- selection and installation of venting devices;
- testing and marking of relief devices.

This standard is intended for tanks containing petroleum and petroleum products, but it can also be applied to tanks containing other liquids; however, it is necessary to use sound engineering analysis and judgment whenever this standard is applied to other liquids.

This standard does not apply to external floating-roof tanks. It however does apply to tanks equipped with an internal floating cover/roof.

2 Normative References

The following referenced documents are indispensable for the application of this document. For dated references, only the edition cited applies. For undated references, the latest edition of the referenced document (including any amendments) applies.

API Standard 650, *Welded Tanks for Oil Storage*

EN 14015, *Specification for the design and manufacture of site built, vertical, cylindrical, flat-bottomed, above ground, welded, steel tanks for the storage of liquids at ambient temperature and above*

3 Terms, Definitions, and Abbreviated Terms

For the purposes of this document, the following terms, definitions, and abbreviated terms apply.

3.1
adjusted set pressure
Inlet static pressure at which a pressure-relief valve is adjusted to open on the test stand.

See **set pressure** (3.24).

NOTE 1 Adjusted set pressure is equivalent to set pressure for direct-mounted end-of-line installations.

NOTE 2 The adjusted set pressure includes corrections for service conditions of superimposed back-pressure.

3.2
autoignition temperature
AIT
The minimum temperature at which a material will ignite with self-sustained combustion without an external source of ignition (such as a spark or flame), see Reference [35].

3.3
British thermal unit
Btu
Unit of heat that increases the temperature of one pound of water by one degree Fahrenheit.

BALLOT DRAFT

This document is not an API Standard; it is under consideration within an API technical committee but has not received all approvals required to become an API Standard. It shall not be reproduced or circulated or quoted, in whole or in part, outside of API committee activities except with the approval of the Chairman of the committee having jurisdiction and staff of the API Standards Dept. Copyright API. All rights reserved.

3.4
bubble point
Temperature at which the first vapor bubble is produced from a liquid mixture of two or more components heated at constant pressure. For single component systems the bubble point is referred to as the boiling point.

3.5
deflagration
A combustion wave that propagates subsonically (as measured at the pressure and temperature of the flame front) by the transfer of heat and active chemical species to the unburned gas ahead of the flame front, see Reference [35].

3.6
detonation
A reaction in a combustion wave propagating at sonic or supersonic velocity (as measured at the pressure and temperature of the flame front). A detonation is stable when it has a velocity equal to the speed of sound in the burnt gas or may be unstable (overdriven) with a higher velocity and pressure, see Reference [35].

3.7
emergency venting
Venting required for external fire or other abnormal conditions (see 4.2.5).

3.8
explosive gas group
The flammable gas-air mixture ranking in relation to the maximum experimental safe gap (see 3.10). There are two primary explosion group ranking systems: 1) IEC – International Electrotechnical Commission; 2) NEC – National Electric Code. These two explosion group ranking systems do not divide the explosion groups at the same MESG values, and so the two explosive gas group ranking systems (IEC and NEC) cannot be directly correlated to each other, although they do overlap.

3.9
full open position
Position where lift of the pallet is sufficient for the nozzle to control the flow or where the pallet or main valve seat lifts against a fixed stop.

3.10
maximum experimental safe gap
MESG
The MESG is the maximum clearance between two parallel metal surfaces that has been found, under specified test conditions, to prevent an explosion in a test chamber from being propagated to a secondary chamber containing the same gas or vapor at the same concentration. The MESG factor was developed for designing electrical equipment for use in hazardous atmospheres, see Reference [35].

3.11
nonrefrigerated tank
Container that stores material in a liquid state without the aid of refrigeration, either by evaporation of the tank contents or by a circulating refrigeration system.

NOTE Generally, the storage temperature is close to, or higher than, ambient temperature.

3.12
normal cubic meters per hour
Nm^3/h
SI unit for volumetric flow rate of air or gas at a temperature of 0 °C and pressure of 101.3 kPa, expressed in cubic meters per hour.

BALLOT DRAFT

This document is not an API Standard; it is under consideration within an API technical committee but has not received all approvals required to become an API Standard. It shall not be reproduced or circulated or quoted, in whole or in part, outside of API committee activities except with the approval of the Chairman of the committee having jurisdiction and staff of the API Standards Dept. Copyright API. All rights reserved.

3.13
normal venting
Venting required because of operational requirements or atmospheric changes.

3.14
overpressure
Pressure increase at the PV valve inlet above the set pressure, when the PV valve is relieving.

NOTE 1 Overpressure is expressed in pressure units or as a percentage of the set pressure.

3.15
petroleum
Crude oil.

3.16
petroleum products
Hydrocarbon materials or other products derived from crude oil.

3.17
PV valve
Weight-loaded, pilot-operated, or spring-loaded pressure vacuum valve used to relieve excess pressure and/or vacuum that has developed in a tank.

3.18
rated relieving capacity
Flow capacity of a relief device expressed in terms of air flow at standard or normal conditions at a designated pressure or vacuum.

NOTE Rated relieving capacity is expressed in SCFH or Nm^3/h.

3.19
refrigerated tank
Container that stores liquid at a temperature below atmospheric temperature with or without the aid of refrigeration, either by evaporation of the tank contents or by a circulating refrigeration system.

3.20
relief device
Device used to relieve excess pressure and/or vacuum that has developed in a tank.

3.21
relieving pressure
Pressure at the inlet of a relief device when the fluid is flowing at the required relieving capacity.

3.22
required flow capacity
Flow through a relief device required to prevent excessive pressure or vacuum in a tank under the most severe operating or emergency conditions.

3.23
rollover
Uncontrolled mass movement of stored liquid, correcting an unstable state of stratified liquids of different densities and resulting in a significant evolution of product vapor.

BALLOT DRAFT

This document is not an API Standard; it is under consideration within an API technical committee but has not received all approvals required to become an API Standard. It shall not be reproduced or circulated or quoted, in whole or in part, outside of API committee activities except with the approval of the Chairman of the committee having jurisdiction and staff of the API Standards Dept. Copyright API. All rights reserved.

3.24
set pressure
Gauge pressure at the relief device inlet at which the device is set to start opening under service conditions.

3.25
standard cubic feet per hour
SCFH
USC unit for volumetric flow rate of air or gas (same as free air or free gas) at a temperature of 15.6 °C (60 °F) and an absolute pressure of 101.3 kPa (14.7 psi), expressed in cubic feet per hour.

3.26
thermal inbreathing
Movement of air or blanketing gas into a tank when vapors in the tank contract or condense as a result of weather changes (e.g. a decrease in atmospheric temperature).

3.27
thermal out-breathing
movement of vapors out of a tank when vapors in the tank expand and/or liquid in the tank vaporizes as a result of weather changes (e.g. an increase in atmospheric temperature).

3.28
vapor pressure
The pressure exerted when a liquid is in equilibrium with its own vapor. Vapor pressure is a function of the substance and temperature.

3.29
wetted area
Surface area of a tank exposed to liquid on the interior and heat from a fire on the exterior.

4 Nonrefrigerated Aboveground Tanks

4.1 General

Section 4 covers the causes of overpressure or vacuum; determination of venting requirements; means of venting; and selection and installation of venting devices.

4.2 Causes of Overpressure or Vacuum

4.2.1 General

When determining the possible causes of overpressure or vacuum in a tank, consider the following:

a) liquid movement into or out of the tank;

b) weather changes (e.g. pressure and temperature changes);

c) fire exposure;

d) other circumstances resulting from equipment failures and operating errors.

There can be additional circumstances that should be considered but are not included in this standard.

4.2.2 Liquid Movement into or out of a Tank

Liquid can enter or leave a tank by pumping, by gravity flow, or by process pressure.

BALLOT DRAFT

This document is not an API Standard; it is under consideration within an API technical committee but has not received all approvals required to become an API Standard. It shall not be reproduced or circulated or quoted, in whole or in part, outside of API committee activities except with the approval of the Chairman of the committee having jurisdiction and staff of the API Standards Dept. Copyright API. All rights reserved.

Vacuum can result from the outflow of liquid from a tank. Overpressure can result from the inflow of liquid into a tank and from the vaporization or flashing of the feed liquid. The user is cautioned that a flashing feed stream can create an outbreathing load that is much greater than the volumetric inflow of liquid. See 4.3 for calculation methods.

4.2.3 Weather Changes

Vacuum can result from the contraction or condensation of vapors caused by a decrease in atmospheric temperature or other weather changes, such as wind changes, precipitation, etc. Overpressure can result from the expansion and vaporization that is caused by an increase in atmospheric temperature or weather changes. See 4.3 for calculation methods.

4.2.4 Fire Exposure

Overpressure can result from the expansion of the vapors and vaporization of the liquid that may occur when a tank absorbs heat from an external fire. See 4.3.3 for calculation methods.

4.2.5 Other Circumstances

4.2.5.1 General

When the possible causes of overpressure or vacuum in a tank are being determined, other circumstances resulting from equipment failures and operating errors shall be considered and evaluated. Calculation methods for these other circumstances are not provided in this standard.

4.2.5.2 Pressure Transfer Vapor Breakthrough

Liquid transfer from other vessels, tank trucks, and tank cars can be aided or accomplished entirely by pressurization of the supply vessel with a gas, but the receiving tank can encounter a flow surge at the end of the transfer due to vapor breakthrough. Depending on the preexisting pressure and free head space in the receiving tank, the additional gas volume can be sufficient to overpressure the tank. The controlling case is a transfer that fills the receiving tank to its maximum level so that little head space remains to absorb the pressure surge.

A similar surge of pressurized gas into a receiving tank can occur during line-clearing operations. Product pipelines (e.g. loading lines) are sometimes cleared of liquid between usages using a pressurized gas. Line clearing operations should be conducted using a designated source of pressurized gas, such that the maximum volumetric flow rate is limited to a value that is within the capacity of the tank's venting device(s).

4.2.5.3 Inert Pads and Purges

Inert pads and purges are provided on tanks to protect the contents of the tanks from contamination, maintain nonflammable atmospheres in the tanks, and reduce the extent of the flammable envelope of the vapors vented from the tanks. An inert pad and purge system normally has a supply regulator and a back-pressure regulator to maintain interior tank pressure within a narrow operating range. Failure of the supply regulator can result in unrestricted gas flow into the tank and subsequent tank overpressure, reduced gas flow, or complete loss of the gas flow. Failure closed of the back-pressure regulator can result in a blocked outlet and overpressure. If the back-pressure regulator is connected to a vapor-recovery system, its failure open can result in vacuum.

4.2.5.4 Abnormal Heat Transfer

Steam, tempered water, and hot oil are common heating media for tanks that contain materials that must be maintained at elevated temperature. Electrical heating elements are also used for the same purpose. Failure of a tank's heat medium supply control valve, temperature-sensing element, or control system can result in tank overpressure due to increased heat input and liquid vaporization.

BALLOT DRAFT

This document is not an API Standard; it is under consideration within an API technical committee but has not received all approvals required to become an API Standard. It shall not be reproduced or circulated or quoted, in whole or in part, outside of API committee activities except with the approval of the Chairman of the committee having jurisdiction and staff of the API Standards Dept. Copyright API. All rights reserved.

Heated tanks that have two liquid phases present the possibility of a rapid vaporization if the lower phase is heated to the point where its density becomes lower than the density of the liquid above it. It is recommended to specify design and operating practices to avoid these conditions.

If a tank maintained at elevated temperatures is empty, excessive feed vaporization can result when the tank is filled. If the temperature control system of the tank is active with the temperature sensing element exposed to vapor, the tank's heating medium can be circulating at maximum rate with the tank wall at maximum temperature. Filling under such conditions can result in excessive feed vaporization. The excessive feed vaporization stops as soon as the walls have cooled and the fluid level covers the sensing element.

For a tank with a cooling jacket or coils, liquid vaporization as a result of the loss of coolant flow shall be considered.

4.2.5.5 Internal Failure of Heat-transfer Devices

Mechanical failure of a tank's internal heating or cooling device can release the heating or cooling medium into the tank. Chemical compatibility of the tank contents and the heat-transfer medium shall be considered. Relief of the heat-transfer medium (e.g. steam) can be necessary.

4.2.5.6 Vent Treatment Systems

If vapor from a tank is collected for treatment or disposal by a vent treatment system, the vent collection system can fail. This failure shall be evaluated. Failures affecting the safety of a tank can include back-pressure developed from problems in the piping (liquid-filled pockets and solids build-up), other equipment venting, or relieving into the header or blockage due to equipment failure. An emergency venting device that relieves to atmosphere, set at a higher pressure than the vent treatment system, may be used if appropriate.

If vacuum can be formed from the tank connection to the vent treatment system, then the required venting capacity of the vacuum relief device should consider the additional flow rate generated by vacuum conditions in the interconnected system.

4.2.5.7 Utility Failure

Local and plant-wide power and utility failures shall be considered as possible causes of overpressure or vacuum. Loss of electrical power directly affects any motorized valves or controllers and can also shut down the instrument air supply. Also, cooling and heating fluids can be lost during an electrical failure.

4.2.5.8 Change in Temperature of the Input Stream to a Tank

A change in the temperature of the input stream to a tank, brought about by a loss of cooling or an increase in heat input, can cause overpressure in the tank. A lower-temperature inlet stream can result in vapor condensation and contraction, which can cause vacuum.

4.2.5.9 Chemical Reactions

The contents of some tanks can be subject to chemical reactions that generate heat and/or vapors. Some examples of chemical reactions include inadvertently adding water to acid or spent acid tanks, thereby generating steam and/or vaporizing light hydrocarbons; runaway reactions in tanks containing cumene hydroperoxide; etc. In some cases, the material can foam, causing two-phase relief.

Technology available from the Design Institute for Emergency Relief Systems (DIERS) Users Group of the American Institute of Chemical Engineers (AICHE) or from the DIERS group in Europe may be used to evaluate these cases.

BALLOT DRAFT

This document is not an API Standard; it is under consideration within an API technical committee but has not received all approvals required to become an API Standard. It shall not be reproduced or circulated or quoted, in whole or in part, outside of API committee activities except with the approval of the Chairman of the committee having jurisdiction and staff of the API Standards Dept. Copyright API. All rights reserved.

4.2.5.10 Liquid Overfill

Tank venting devices should not be used for protection against liquid overfill. For information on liquid overfill protection, see API 2510, API 2350, and EN 13616.

4.2.5.11 Atmospheric Pressure Changes

A rise or drop in barometric pressure is a possible cause of vacuum or overpressure in a tank. This is usually insignificant for nonrefrigerated tanks; however, it should be considered for refrigerated tanks since the material is being stored close to its boiling point (see 5.2.1.2).

4.2.5.12 Control Valve Failure

The effect of a control valve failing open or failing closed shall be considered to determine the potential for pressure or vacuum due to mass and/or energy imbalances. For example, failure of a control valve on the liquid line to a tank can increase heat input or decrease heat removal resulting in the admission of high-temperature material into the tank. A control-valve failure can also cause the liquid level in a pressurized vessel feeding liquid to a tank to drop below the vessel outlet nozzle, allowing high-pressure vapor to enter the tank (see 4.2.5.2).

4.2.5.13 Steam Condensation

If an uninsulated tank is filled with steam (e.g. for steam-out decontamination), the condensing rate due to ambient cooling can exceed the venting rates specified in this standard. Procedures, such as the use of large vents (open manways), controlling the tank cooling rate, or adding a noncondensable gas such as air or nitrogen, may be necessary to prevent excessive internal vacuum.

4.2.5.14 Uninsulated Hot Tanks

Uninsulated tanks with exceptionally hot vapor spaces can exceed the thermal inbreathing requirements in this standard during a rainstorm. Vapor contraction and/or condensing can cause excessive vacuum. An engineering review of heated, uninsulated tanks with vapor-space temperatures above 48.9 °C (120 °F) is recommended.

4.2.5.15 Internal Explosion/Deflagration

If a tank vapor space becomes flammable and is ignited, the resulting gas expansion can exceed the capabilities of storage tank pressure relief vents. Therefore, tank pressure relief vents shall not be used as explosion/deflagration venting devices. Refer to NFPA 68 and EN 13237 for alternative methods for mitigating tank internal deflagration. See 4.5 for considerations for tanks with potentially flammable atmospheres.

4.2.5.16 Mixing of Products of Different Composition

Introduction of materials that are more volatile than those normally stored can be possible due to upsets in upstream processing or human error. This can result in overpressure.

Introduction of materials into tanks with different physical properties may not adequately mix as expected. For vent system evaluations the user should consider perfect, imperfect, and/or no mixing for incoming streams when designing a vent system.

BALLOT DRAFT

This document is not an API Standard; it is under consideration within an API technical committee but has not received all approvals required to become an API Standard. It shall not be reproduced or circulated or quoted, in whole or in part, outside of API committee activities except with the approval of the Chairman of the committee having jurisdiction and staff of the API Standards Dept. Copyright API. All rights reserved.

4.3 Determination of Venting Requirements

4.3.1 General

Determine the applicable causes of overpressure and vacuum (refer to 4.2) and quantify the venting requirements for each one. The following guidance can assist in quantifying the venting requirements for commonly encountered conditions:

a) normal inbreathing resulting from a maximum outflow of liquid from the tank (liquid-transfer effects),

b) normal inbreathing resulting from contraction or condensation of vapors caused by a maximum decrease in vapor-space temperature (thermal effects),

c) normal out-breathing resulting from a maximum inflow of liquid into the tank and maximum vaporization caused by such inflow (liquid-transfer effects),

d) normal out-breathing resulting from expansion and vaporization that results from a maximum increase in vapor-space temperature (thermal effects),

e) emergency venting resulting from fire exposure.

When determining the venting requirements, the largest single contingency requirement or any reasonable and probable combination of contingencies shall be considered as the design basis. At a minimum, the combination of the liquid-transfer effects and thermal effects for normal venting shall be considered when determining the total normal inbreathing or out-breathing.

With the exception of refrigerated storage tanks, common practice is to consider only the total normal inbreathing for determining the venting requirements. That is, inbreathing loads from other circumstances described in 4.2.5 are generally not considered coincident with the normal inbreathing. This is considered a reasonable approach because the thermal inbreathing is a severe and short-lived condition.

For the total out-breathing, consider the scenarios described in 4.2.5 and determine whether these should be coincident with normal out-breathing venting requirements.

4.3.2 Calculation of Required Flow Capacity for Normal Out-breathing and Inbreathing

4.3.2.1 General

The method described in 4.3.2.1 is based on engineering calculations. See Annex E for the assumptions on which this calculation method is based. For a more detailed understanding of this model, see References [20] and [21].

Alternatively, the normal out-breathing and inbreathing flow rates may be based on the method described in Annex A where the tank meets the service conditions specified in Annex A. It is the user's responsibility to determine which method is used for sizing tank vents for new or existing tanks.

The calculation method utilized shall be documented.

4.3.2.2 Required Flow Capacity Due to Filling and Discharge

4.3.2.2.1 Out-breathing

The out-breathing shall be determined as follows. In these calculations, the vapor/gas being displaced will be at the actual pressure and temperature conditions of the tank vapor space. When these equations are used for tanks operating above 49 °C (120 °F), out-breathing flows shall be converted to an air-equivalent flow at normal or standard conditions. The intent is to find an equivalent volumetric flow of air at standard or normal

BALLOT DRAFT

This document is not an API Standard; it is under consideration within an API technical committee but has not received all approvals required to become an API Standard. It shall not be reproduced or circulated or quoted, in whole or in part, outside of API committee activities except with the approval of the Chairman of the committee having jurisdiction and staff of the API Standards Dept. Copyright API. All rights reserved.

conditions that requires the same effective discharge area as the required relief rate determined for the actual fluid conditions. Annex D.9 provides more information on performing this conversion.

a) *Nonvolatile Liquids*—Nonvolatile liquids are products with a vapor pressure equal to or less than 5.0 kPa (0.73 psi).

The out-breathing volumetric flow rate $\dot{V}_{op}$, expressed in SI units of cubic meters per hour of vapor/gas at the actual pressure and temperature conditions of the tank vapor space, shall be as given by Equation (1):

$$\dot{V}_{op} = \dot{V}_{pf} \quad (1)$$

where $\dot{V}_{pf}$ is the maximum volumetric filling rate of nonvolatile liquids, expressed in cubic meters per hour.

The out-breathing volumetric flow rate $\dot{V}_{op}$, expressed in USC units of cubic feet per hour of vapor/gas at the actual pressure and temperature conditions of the tank vapor space shall be as given by Equation (2):

$$\dot{V}_{op} = 8.02 \cdot \dot{V}_{pf} \quad (2)$$

where $\dot{V}_{pf}$ is the maximum volumetric filling rate of nonvolatile liquids, expressed in U.S. gallons per minute.

b) *Volatile Liquids*—Volatile liquids are products with a vapor pressure greater than 5.0 kPa (0.73 psi). The flow of volatile liquids into a tank will result in higher out-breathing flow (compared to the same inflow with a nonvolatile liquid) due to changes in liquid-vapor equilibrium.

The out-breathing volumetric flow rate $\dot{V}_{op}$, expressed in SI units of cubic meters per hour of vapor/gas at the actual pressure and temperature conditions of the tank vapor space, shall be as given by Equation (3):

$$\dot{V}_{op} = 2.0 \cdot \dot{V}_{pf} \quad (3)$$

where $\dot{V}_{pf}$ is the maximum volumetric filling rate of volatile liquid, expressed in cubic meters per hour.

The out-breathing volumetric flow rate $\dot{V}_{op}$, expressed in USC units of cubic feet per hour of vapor/gas at the actual pressure and temperature conditions of the tank vapor space, shall be as given by Equation (4):

$$\dot{V}_{op} = 16.04 \cdot \dot{V}_{pf} \quad (4)$$

Where $\dot{V}_{pf}$ is the maximum volumetric filling rate of volatile liquid, expressed in U.S. gallons per minute.

c) *Flashing Liquids*— Flashing liquids can cause the venting requirement to be many times greater than the volumetric in-flow of the liquid. Flashing will occur when the vapor pressure of the entering stream is

BALLOT DRAFT

This document is not an API Standard; it is under consideration within an API technical committee but has not received all approvals required to become an API Standard. It shall not be reproduced or circulated or quoted, in whole or in part, outside of API committee activities except with the approval of the Chairman of the committee having jurisdiction and staff of the API Standards Dept. Copyright API. All rights reserved.

greater than the operating pressure of the tank. For products that can flash due to high temperature or because of dissolved gases (e.g. oil spiked with methane), perform an equilibrium flash calculation and increase the out-breathing venting requirements accordingly.

NOTE: The potential for flashing liquids resulting in venting should be considered for tanks operating at temperatures greater than the bubble point temperature of all potential incoming liquids (including liquids that could potentially enter due to other circumstances; for example, maintenance procedures to clear blockage in filters may use water or lower boiling hydrocarbons that may be discharged into the high temperature inventory of the tank potentially resulting rapid vapor expansion or explosion). Incidents associated with the injection of volatile liquids have occurred in heavy oil and asphalt storage tanks. Care should be taken to ensure that procedures and venting requirements of the tanks are adequate to prevent overpressure.

NOTE: Conversely, feeding hot liquids with a temperature greater than the bubble point temperature of the tank inventory should also be considered ($T_{inlet} > T_{BP}$ (inventory); hot oil into water, for example). Ensure that prior to start-up and post steam out, procedures to remove all liquid water are in place to prevent steam explosions.

4.3.2.2.2 Inbreathing

The inbreathing venting requirement $\dot{V}_{ip}$, expressed in SI units of normal cubic meters per hour of air, shall be the maximum specified liquid discharging capacity for the tank as given by Equation (5).

$$\dot{V}_{ip} = \dot{V}_{pe} \tag{5}$$

where $\dot{V}_{pe}$ is the maximum rate of liquid discharging, expressed in cubic meters per hour.

Calculate the inbreathing venting requirement $\dot{V}_{ip}$, expressed in USC units of standard cubic feet per hour of air, in accordance with Equation (6):

$$\dot{V}_{ip} = 8.02 \cdot \dot{V}_{pe} \tag{6}$$

where $\dot{V}_{pe}$ is the maximum rate of liquid discharging, expressed in U.S. gallons per minute.

The calculated inbreathing assumes ambient air flow through the tank vent. It is typical practice to assume the ambient air is at normal or standard conditions. If a medium other than air is used for vacuum relief, then it may be necessary to convert the rate to an air equivalent flow. See D.9.

4.3.2.3 Required Flow Capacity Due to Thermal Out-breathing and Inbreathing

4.3.2.3.1 General

Consider thermal out-breathing and inbreathing due to atmospheric heating or cooling of the external surfaces of the tank shell and roof. Calculation of the thermal in and out-breathing is a function of tank vapor volume. For vertical cylindrical tanks, use of volume based on the tank shell height is acceptable. The calculated thermal inbreathing and out-breathing are expressed in normal/standard air equivalent flow as defined in Annex D.2.

BALLOT DRAFT

This document is not an API Standard; it is under consideration within an API technical committee but has not received all approvals required to become an API Standard. It shall not be reproduced or circulated or quoted, in whole or in part, outside of API committee activities except with the approval of the Chairman of the committee having jurisdiction and staff of the API Standards Dept. Copyright API. All rights reserved.

4.3.2.3.2 Thermal Out-breathing

Calculate the thermal out-breathing (i.e. the maximum thermal flow rate for heating up) $\dot{V}_{OT}$, expressed in SI units of normal cubic meters per hour of air, in accordance with Equation (7):

$$\dot{V}_{OT} = Y \cdot V_{tk}^{0.9} \cdot R_i \tag{7}$$

where

Y is a factor for the latitude (see Table 1);

V_{tk} is the tank volume, expressed in cubic meters;

R_i is the reduction factor for insulation {$R_i = 1$ if no insulation is used; $R_i = R_{inp}$ for partially insulated tanks [see Equation (12)]; $R_i = R_{in}$ for fully insulated tanks [see Equation (11)]}.

Calculate the thermal out-breathing (i.e. the maximum thermal flow rate for heating up) $\dot{V}_{OT}$, expressed in USC units as standard cubic feet per hour of air, in accordance with Equation (8):

$$\dot{V}_{OT} = 1.51 \cdot Y \cdot V_{tk}^{0.9} \cdot R_i \tag{8}$$

where

Y is a factor for the latitude (see Table 1);

V_{tk} is the tank volume, expressed in cubic feet;

R_i is the reduction factor for insulation {$R_i = 1$ if no insulation is used; $R_i = R_{inp}$ for partially insulated tanks [see Equation (12)]; $R_i = R_{in}$ for fully insulated tanks [see Equation (11)]}.

The Y-factor for the latitude in Equations (7) and (8) can be taken from Table 1.

Table 1—*Y*-factor for Various Latitudes

Latitude	*Y*-factor
Below 42°	0.32
Between 42° and 58°	0.25
Above 58°	0.2

4.3.2.3.3 Thermal Inbreathing

Calculate the maximum thermal flow rate during cooling down $\dot{V}_{IT}$, expressed in SI units of normal cubic meters per hour of air, in accordance with Equation (9):

$$\dot{V}_{IT} = C \cdot V_{tk}^{0.7} \cdot R_i \tag{9}$$

BALLOT DRAFT

This document is not an API Standard; it is under consideration within an API technical committee but has not received all approvals required to become an API Standard. It shall not be reproduced or circulated or quoted, in whole or in part, outside of API committee activities except with the approval of the Chairman of the committee having jurisdiction and staff of the API Standards Dept. Copyright API. All rights reserved.

where

C is a factor that depends on vapor pressure, average storage temperature and latitude (see Table 2);

V_{tk} is the tank volume, expressed in cubic meters;

R_i is the same as for Equation (7).

Calculate the maximum thermal flow rate during cooling down $\dot{V}_{IT}$, expressed in USC units of standard cubic feet per hour of air, in accordance with Equation (10):

$$\dot{V}_{IT} = 3.08 \cdot C \cdot V_{tk}^{0.7} \cdot R_i \quad (10)$$

where

C is a factor that depends on vapor pressure, average storage temperature and latitude (see Table 2);

V_{tk} is the tank volume, expressed in cubic feet;

R_i is the same as for Equation (8).

The calculated inbreathing assumes ambient air flow through the tank vent. It is typical practice to assume the ambient air is at normal or standard conditions. If a medium other than air is used for vacuum relief, then it may be necessary to convert the rate to an air equivalent flow. See D.9.

Uninsulated hot tanks that could be subjected to a rapid temperature drop greater than 40 °C may have inbreathing rates higher than indicated above. These should be evaluated on a case-by-case basis. See 4.2.5.14.

Table 2—*C*-factors

Latitude	***C*-factor for various conditions**			
	Vapor pressure similar to Hexane		Vapor pressure higher than hexane, or unknown	
	Average storage temperature °C			
	< 25	≥ 25	< 25	≥ 25
Below 42°	4	6.5	6.5	6.5
Between 42° and 58°	3	5	5	5
Above 58°	2.5	4	4	4

4.3.2.4 Reduction Factor for Tanks with Insulation

The thermal flow rate for heating up (thermal out-breathing) or cooling down (thermal inbreathing) is reduced by insulation and depends upon the properties and thickness of the insulation.

Calculate the reduction factor, R_{in}, for a fully insulated tank as given by Equation (11).

BALLOT DRAFT

This document is not an API Standard; it is under consideration within an API technical committee but has not received all approvals required to become an API Standard. It shall not be reproduced or circulated or quoted, in whole or in part, outside of API committee activities except with the approval of the Chairman of the committee having jurisdiction and staff of the API Standards Dept. Copyright API. All rights reserved.

$$R_{in} = \frac{1}{1 + \frac{h \cdot l_{in}}{\lambda_{in}}} \quad (11)$$

where

h is the inside heat-transfer coefficient, expressed in watts per square meter-kelvin [Btu/(h·ft^2·°F)];

NOTE An inside heat-transfer coefficient of 4 W/(m^2·K) [0.7 Btu/(h·ft^2·°F)] is commonly assumed for typical tanks.

l_{in} is the wall thickness of the insulation, expressed in meters (ft);

λ_{in} is the thermal conductivity of the insulation, expressed in watts per meter-kelvin [Btu/(h·ft·°F)].

EXAMPLE For an insulation thickness l_{in}, equal to 0.1 m, a thermal conductivity of the insulation λ_{in}, equal to 0.05 W/(m·K), and a heat-transfer coefficient h, equal to 4 W/(m^2·K), the reduction factor R_{in} is equal to 0.11. Thus, the out-breathing venting requirement of the insulated tank is 0.11 times that of the uninsulated tank.

Calculate the reduction factor, R_{inp}, for a partially insulated tank as given by Equation (12):

$$R_{inp} = \frac{A_{inp}}{A_{TTS}} \cdot R_{in} + \left(1 - \frac{A_{inp}}{A_{TTS}}\right) \quad (12)$$

where

A_{TTS} is the total tank surface area (shell and roof), expressed in square meters (square feet);

A_{inp} is the insulated surface area of the tank, expressed in square meters (square feet).

Caution: The thermal conductivity of wet insulation may be significantly different from dry insulation, which may result in increased thermal inbreathing and outbreathing rates. It is important that the insulation remains dry with proper installation and maintenance of the weatherproof cladding if reduction factor credit is taken.

4.3.2.5 Reduction Factor for Double Wall Tanks

Double wall tanks will have reduced heat transfer to the environment. The reduction factor, R_c, may be calculated using Equation (13):

$$R_c = 0.25 + 0.75 \frac{A_c}{A} \quad (13)$$

where

A is the total tank surface area (shell and roof), in square meters or square feet;

A_c is the tank surface area not inside of the containment tank, in square meters or square feet.

Use the R_c value for R_i in Equations (7), (8), (9), and (10).

BALLOT DRAFT

This document is not an API Standard; it is under consideration within an API technical committee but has not received all approvals required to become an API Standard. It shall not be reproduced or circulated or quoted, in whole or in part, outside of API committee activities except with the approval of the Chairman of the committee having jurisdiction and staff of the API Standards Dept. Copyright API. All rights reserved.

4.3.3 Required Flow Capacity for External Fire Exposure (Emergency Venting)

4.3.3.1 General

When storage tanks are exposed to fire, the venting rate can exceed the rate resulting from normal out-breathing.

4.3.3.2 Tanks with Weak Roof-to-shell Attachment

On a fixed-roof tank with a weak (frangible) roof-to-shell attachment, such as that described in API 650, the roof-to-shell connection will fail prior to other tank welds, allowing relief of the excess pressure if the normal venting capacity proves inadequate. For a tank built to these specifications, it is not necessary to consider additional requirements for emergency venting; however, additional emergency vents may be used to avoid failure of the frangible joint. Care should be taken to ensure that the current requirements for a frangible roof-to-shell attachment are met, particularly for tanks smaller than 15 m (50 ft) in diameter.

4.3.3.3 Fire Relief Requirements

4.3.3.3.1 When a tank is not provided with a weak roof-to-shell attachment as described in 4.3.3.2, the procedure given in 4.3.3.3.2 through 4.3.3.3.7 shall govern in evaluating the required flow capacity for fire exposure.

4.3.3.3.2 Calculate the required flow capacity q, expressed in SI units of normal cubic meters per hour of air, for tanks subject to fire exposure as given by Equation (14):

$$q = 906.6 \cdot \frac{Q \cdot F}{L} \cdot \left(\frac{T}{M} \right)^{0.5} \tag{14}$$

where

Q is the heat input from fire exposure as given by Table 3, expressed in watts;

F is the environmental factor from Table 9 (credit may be taken for only one environmental factor);

L is the latent heat of vaporization of the stored liquid at the relieving pressure and temperature, expressed in joules per kilogram;

T is the absolute temperature of the relieving vapor, expressed in kelvins;

NOTE It is normally assumed that the temperature of the relieving vapor corresponds to the bubble point of the stored fluid at the relieving pressure.

M is the relative molecular mass of the vapor.

Table 3—Heat Input, Q
(Expressed in SI Units)

Wetted Surface Area, A_{TWS} m^2	**Design Pressure** kPa (gauge)	**Heat Input, Q** W
<18.6	≤103.4	$63{,}150 A_{TWS}$
≥18.6 and <93	≤103.4	$224{,}200 \times (A_{TWS}^{0.566})$
≥93 and <260	≤103.4	$630{,}400 \times (A_{TWS}^{0.338})$

BALLOT DRAFT

This document is not an API Standard; it is under consideration within an API technical committee but has not received all approvals required to become an API Standard. It shall not be reproduced or circulated or quoted, in whole or in part, outside of API committee activities except with the approval of the Chairman of the committee having jurisdiction and staff of the API Standards Dept. Copyright API. All rights reserved.

≥260	>7 and ≤103.4	$43{,}200 \times (A_{TWS}{}^{0.82})$
≥260	≤7	4,129,700

Calculate the required flow capacity q, expressed in USC units of standard cubic feet per hour of air, for tanks subject to fire exposure as given by Equation (15).

$$q = 3.091 \cdot \frac{Q \cdot F}{L} \cdot \left(\frac{T}{M}\right)^{0.5} \tag{15}$$

where

Q is the heat input from fire exposure as given by Table 4, expressed in British thermal units per hour;

F is the environmental factor from Table 9 (credit may be taken for only one environmental factor);

L is the latent heat of vaporization of the stored liquid at the relieving pressure and temperature, expressed in British thermal units per pound;

T is the absolute temperature of the relieving vapor, expressed in degrees Rankine;

NOTE It is normally assumed that the temperature of the relieving vapor corresponds to the bubble point of the stored fluid at the relieving conditions in the tank.

M is the relative molecular mass of the vapor.

The fire relief requirements presented are expressed as air-equivalent flow rates based on the conversion of the actual vapor generation rate into an equivalent volume of air (at either normal or standard conditions) Refer to D.9 for more information.

Table 4—Heat Input, Q
(Expressed in USC Units)

Wetted Surface Area, A_{TWS} ft^2	**Design Pressure** psig	**Heat Input, Q** Btu/h
<200	≤15	$20{,}000A_{TWS}$
≥200 and <1,000	≤15	$199{,}300 \times (A_{TWS}{}^{0.566})$
≥1,000 and <2,800	≤15	$963{,}400 \times (A_{TWS}{}^{0.338})$
≥2,800	>1 and ≤15	$21{,}000 \times (A_{TWS}{}^{0.82})$
≥2,800	≤1	14,090,000

BALLOT DRAFT

This document is not an API Standard; it is under consideration within an API technical committee but has not received all approvals required to become an API Standard. It shall not be reproduced or circulated or quoted, in whole or in part, outside of API committee activities except with the approval of the Chairman of the committee having jurisdiction and staff of the API Standards Dept. Copyright API. All rights reserved.

4.3.3.3.3 Where the fluid properties are similar to those of hexane, the required venting capacity can be determined from Table 5 or Table 6.

Table 5—Venting Capacity
(Expressed in SI Units)

Wetted Surface Area, A_{TWS} [a] m^2	**Design Pressure** kPa (gauge)	**Required Venting Capacity** Nm^3/h of air
<260	≤103.4	See Table 7 and 4.3.3.3.4
≥260	≤7	19,910 (see 4.3.3.3.4)
≥260	>7 and ≤103.4	Use Equation (16) [b]

[a] The wetted area of a tank or storage vessel shall be calculated as follows.

— For spheres and spheroids, the wetted area is equal to 55 % of the total surface area or the surface area to a height of 9.14 m above grade, whichever is greater.

— For horizontal tanks, the wetted area is equal to 75 % of the total surface area or the surface area to a height of 9.14 m above grade, whichever is greater.

— For vertical tanks, the wetted area is equal to the total surface area of the vertical shell to a height of 9.14 m above grade. For a vertical tank setting on the ground, the area of the ground plates is not included as wetted area. For a vertical tank supported above grade, it is necessary to include a portion of the area of the bottom as additional wetted surface. The portion of the bottom area exposed to a fire depends on the diameter and elevation of the tank above grade. It is necessary to use engineering judgment in evaluating the portion of the area exposed to fire.

[b] Calculate the venting requirement q, expressed in normal cubic meters per hour of air as given in Equation (16), which is based on the total heat absorbed Q, expressed in watts, equal to $43{,}200A_{TWS}^{0.82}$ [see Equation (B.7)]:

$$q = 208.2\ F \cdot A_{TWS}^{0.82} \qquad (16)$$

where

F is the environmental factor from Table 9 (credit may be taken for only one environmental factor);

A_{TWS} is the wetted surface area, expressed in square meters.

The total heat absorbed, Q, is expressed in watts for Equation (16). Table 7 and the constant 208.2 in Equation (16) are derived from Equation (14) and Figure B.1 by using the latent heat of vaporization of hexane, equal to 334,900 J/kg at atmospheric pressure, and the relative molecular mass of hexane (86.17) and assuming a vapor temperature of 15.6 °C. This method provides results within an acceptable degree of accuracy for many fluids having similar properties (see Annex B).

BALLOT DRAFT

This document is not an API Standard; it is under consideration within an API technical committee but has not received all approvals required to become an API Standard. It shall not be reproduced or circulated or quoted, in whole or in part, outside of API committee activities except with the approval of the Chairman of the committee having jurisdiction and staff of the API Standards Dept. Copyright API. All rights reserved.

Table 6—Venting Capacity
(Expressed in USC Units)

Wetted Surface Area, A_{TWS} [a] ft^2	**Design Pressure** psig	**Required Venting Capacity** SCFH of air
<2,800	≤15	See Table 8 and 4.3.3.3.4
≥2,800	≤1	742,000 (see 4.3.3.3.4)
≥2,800	>1 and ≤15	Use Equation (17) [b]

[a] The wetted area of a tank or storage vessel shall be calculated as follows.

— For spheres and spheroids, the wetted area is equal to 55 % of the total surface area or the surface area to a height of 30 ft above grade, whichever is greater.

— For horizontal tanks, the wetted area is equal to 75 % of the total surface area or the surface area to a height of 30 ft above grade, whichever is greater.

— For vertical tanks, the wetted area is equal to the total surface area of the vertical shell to a height of 30 ft above grade. For a vertical tank setting on the ground, the area of the ground plates is not included as wetted area. For a vertical tank supported above grade, it is necessary to include a portion of the area of the bottom as additional wetted surface. The portion of the bottom area exposed to a fire depends on the diameter and elevation of the tank above grade. It is necessary to use engineering judgment in evaluating the portion of the area exposed to fire.

[b] Calculate the venting requirement q, expressed in standard cubic feet per hour of air as given in Equation (17), which is based on the total heat absorbed Q, expressed in British thermal units per hour, equal to $21{,}000A_{TWS}^{0.82}$ [see Equation (B.8)]:

$$q = 1107\, F \cdot A_{TWS}^{0.82} \qquad (17)$$

where

F is the environmental factor from Table 9 (credit may be taken for only one environmental factor);

A_{TWS} is the wetted surface area, expressed in square feet.

The total heat absorbed, Q, is expressed in Btu per hour for Equation (17). Table 8 and the constant 1107 in Equation (17) are derived from Equation (15) and Figure B.1 by using the latent heat of vaporization of hexane, equal to 144 Btu/lb at atmospheric pressure, and the relative molecular mass of hexane (86.17) and assuming a vapor temperature of 60 °F. This method provides results within an acceptable degree of accuracy for many fluids having similar properties (see Annex B).

BALLOT DRAFT

This document is not an API Standard; it is under consideration within an API technical committee but has not received all approvals required to become an API Standard. It shall not be reproduced or circulated or quoted, in whole or in part, outside of API committee activities except with the approval of the Chairman of the committee having jurisdiction and staff of the API Standards Dept. Copyright API. All rights reserved.

Table 7—Emergency Venting Required for Fire Exposure vs Wetted Surface Area
(Expressed in SI Units)

Wetted Area [a] m^2	**Venting Required** Nm^3/h		**Wetted Area** [a] m^2	**Venting Required** Nm^3/h
2	608		35	8,086
3	913		40	8,721
4	1,217		45	9,322
5	1,521		50	9,895
6	1,825		60	10,971
7	2,130		70	11,971
8	2,434		80	12,911
9	2,738		90	13,801
11	3,347		110	15,461
13	3,955		130	15,751
15	4,563		150	16,532
17	5,172		175	17,416
19	5,780		200	18,220
22	6,217		230	19,102
25	6,684		260	19,910
30	7,411		>260 [b]	—

[a] The wetted area of a tank or storage vessel shall be calculated as follows.

— For spheres and spheroids, the wetted area is equal to 55 % of the total surface area or the surface area to a height of 9.14 m above grade, whichever is greater.

— For horizontal tanks, the wetted area is equal to 75 % of the total surface area or the surface area to a height of 9.14 m above grade, whichever is greater.

— For vertical tanks, the wetted area is equal to the total surface area of the vertical shell to a height of 9.14 m above grade. For a vertical tank setting on the ground, the area of the ground plates is not included as wetted area. For a vertical tank supported above grade, it is necessary to include a portion of the area of the bottom as additional wetted surface. The portion of the bottom area exposed to a fire depends on the diameter and elevation of the tank above grade. It is necessary to use engineering judgment in evaluating the portion of the area exposed to fire.

[b] For wetted surfaces larger than 260 m^2, see Table 5.

NOTE This table and the constant 208.2 in Equation (16) are derived from Equation (14) and Figure B.1 by using the latent heat of vaporization of hexane, equal to 334,900 J/kg at atmospheric pressure, and the relative molecular mass of hexane (86.17) and assuming a vapor temperature of 15.6 °C. This method provides results within an acceptable degree of accuracy for many fluids having similar properties (see Annex B).

BALLOT DRAFT

This document is not an API Standard; it is under consideration within an API technical committee but has not received all approvals required to become an API Standard. It shall not be reproduced or circulated or quoted, in whole or in part, outside of API committee activities except with the approval of the Chairman of the committee having jurisdiction and staff of the API Standards Dept. Copyright API. All rights reserved.

Table 8—Emergency Venting Required for Fire Exposure vs Wetted Surface Area
(Expressed in USC Units)

Wetted Area [a] ft^2	**Venting Required** SCFH		**Wetted Area** [a] ft^2	**Venting Required** SCFH
20	21,100		350	288,000
30	31,600		400	312,000
40	42,100		500	354,000
50	52,700		600	392,000
60	63,200		700	428,000
70	73,700		800	462,000
80	84,200		900	493,000
90	94,800		1,000	524,000
100	105,000		1,200	557,000
120	126,000		1,400	587,000
140	147,000		1,600	614,000
160	168,000		1,800	639,000
180	190,000		2,000	662,000
200	211,000		2,400	704,000
250	239,000		2,800	742,000
300	265,000		>2,800 [b]	—

[a] The wetted area of a tank or storage vessel shall be calculated as follows.

— For spheres and spheroids, the wetted area is equal to 55 % of the total surface area or the surface area to a height of 30 ft above grade, whichever is greater.

— For horizontal tanks, the wetted area is equal to 75 % of the total surface area or the surface area to a height of 30 ft above grade, whichever is greater.

— For vertical tanks, the wetted area is equal to the total surface area of the vertical shell to a height of 30 ft above grade. For a vertical tank setting on the ground, the area of the ground plates is not included as wetted area. For a vertical tank supported above grade, it is necessary to include a portion of the area of the bottom as additional wetted surface. The portion of the bottom area exposed to a fire depends on the diameter and elevation of the tank above grade. It is necessary to use engineering judgment in evaluating the portion of the area exposed to fire.

[b] For wetted surfaces larger than 2800 ft^2, see Table 6.

NOTE This table, and the constant 1107 in Equation (17), were derived from Equation (15) and Figure B.1 by using the latent heat of vaporization of hexane, equal to 144 Btu/lb at atmospheric pressure, and the relative molecular mass of hexane (86.17) and assuming a vapor temperature of 60 °F. This method provides results within an acceptable degree of accuracy for many fluids having similar properties (see Annex B).

BALLOT DRAFT

This document is not an API Standard; it is under consideration within an API technical committee but has not received all approvals required to become an API Standard. It shall not be reproduced or circulated or quoted, in whole or in part, outside of API committee activities except with the approval of the Chairman of the committee having jurisdiction and staff of the API Standards Dept. Copyright API. All rights reserved.

Table 9—Environmental Factors for Nonrefrigerated Aboveground Tanks
(Expressed in SI and USC Units)

Tank Design/Configuration	F-factor [f]
Bare metal tank	1.0
Insulated tank [a]	[b]
Concrete tank or fireproofing [a]	[b]
Water-application facilities [c]	1.0
Depressuring and emptying facilities [d]	1.0
Underground storage	0
Earth-covered storage above grade	0.03
Impoundment away from tank [e]	0.5

[a] The insulation and fireproofing shall resist dislodgment by fire-fighting equipment, shall be noncombustible and shall not decompose at temperatures up to 537.8 °C (1000 °F). The user is responsible for determining whether the insulation can resist dislodgment by the available fire-fighting equipment. If the insulation does not meet these criteria, no credit for insulation shall be taken.

[b] For single-layer insulated tanks, the environment factor, *F*-factor, for insulation is given by Equation (18) and Equation (19). Refer to API 521 for more information on insulation environmental factors and the use of the F-factor for an equivalent conductance value of insulation.

In SI units:

$$F = \frac{k(904 - T_f)}{66{,}570 l_{\text{in}}} \tag{18}$$

In USC units:

$$F = \frac{k(1660 - T_f)}{21{,}000 l_{\text{in}}} \tag{19}$$

where

k is the thermal conductivity of insulation at mean temperature, expressed in W/m·K (Btu·in/h·ft2·°F);

l_{in} is the thickness of insulation, expressed in m (in.);

T_f is the temperature of vessel contents at relieving conditions, expressed in °C (°F).

NOTE For the purposes of these provisions, ISO 23251 is equivalent to API 521.

[c] Under ideal conditions, water films covering metal surfaces can absorb most incident radiation. The reliability of water application depends on many factors. Freezing weather, high winds, clogged systems, undependable water supply, and tank surface conditions can prevent uniform water coverage. Because of these uncertainties, no reduction in environmental factors is recommended; however, as stated previously, properly applied water can be very effective.

[d] Depressuring devices may be used, but no credit shall be allowed in sizing the venting device for fire exposure.

[e] The following conditions shall be met.

- A slope of not less than 1 % away from the tank shall be provided for at least 15 m (50 ft) toward the impounding area.
- The impounding area shall have a capacity that is not less than the capacity of the largest tank that can drain into it.
- The drainage system routes from other tanks to their impounding areas shall not seriously expose the tank.
- The impounding area for the tank, as well as the impounding areas for the other tanks (whether remote or with dikes around the other tanks), shall be located so that when the area is filled to capacity, its liquid level is no closer than 15 m (50 ft) to the tank.

[f] Local regulations may specify or allow different F-factors. For example, NFPA 30 and OSHA 1910.106 allow different credit for water spray and insulation.

BALLOT DRAFT

This document is not an API Standard; it is under consideration within an API technical committee but has not received all approvals required to become an API Standard. It shall not be reproduced or circulated or quoted, in whole or in part, outside of API committee activities except with the approval of the Chairman of the committee having jurisdiction and staff of the API Standards Dept. Copyright API. All rights reserved.

4.3.3.3.4 The total rate of venting determined from Table 7 or Table 8 may be multiplied by an appropriate environmental factor, F, selected from Table 9; credit may be taken for only one environmental factor.

4.3.3.3.5 Credit may be taken for the venting capacity provided by the device installed for normal venting, since the normal thermal effect can be disregarded during a fire. Also, it can be assumed that there is no liquid movement into the tank during fire exposure.

4.3.3.3.6 If normal venting devices have inadequate capacity, additional emergency venting devices of the type described in 4.4.2 shall be provided so that the total venting capacity is at least equivalent to that required by Table 5 or Table 6 or by Equation (14) or Equation (15).

4.3.3.3.7 The total venting capacity shall be based on the pressure indicated in 4.6.2.

4.4 Means of Venting

4.4.1 Normal Venting

4.4.1.1 General

Normal venting for pressure and vacuum shall be accomplished by a PV valve with or without a flame-arresting device or by an open vent with or without a flame-arresting device.

Protect atmospheric storage tanks against flame transmission from outside the tank if

- the stored liquid has a low flash point, i.e. less than 60 °C (140 °F) or in accordance with the applicable regulations, whichever is higher; or
- the storage temperature can exceed the flash point; or
- the tank can otherwise contain a flammable vapor space.

See 4.5 for design considerations for tanks that have potentially flammable atmospheres. A discussion of the types and operating characteristics of venting devices can be found in Annex C.

Relief devices equipped with a weight-lever mechanism for adjusting the set pressure, and non-reclosing relief devices are not recommended for normal venting.

4.4.1.2 Pressure/Vacuum Valves

To avoid product loss, PV valves are recommended for use on atmospheric storage tanks.

4.4.1.3 Internal Floating Cover/Roofs

While an internal floating cover/roof is not a means of venting, it is an additional method to avoid product loss. Venting of tank vapor space shall follow the design requirements of API 650 or EN 14015.

4.4.1.4 Open Vents

If open vents are selected to provide venting capacity for tanks that can contain a flammable vapor space as defined in 4.4.1.1, a flame-arresting device should be used. Open vents without a flame-arresting device may be used for tanks that do not contain a flammable vapor space.

BALLOT DRAFT

This document is not an API Standard; it is under consideration within an API technical committee but has not received all approvals required to become an API Standard. It shall not be reproduced or circulated or quoted, in whole or in part, outside of API committee activities except with the approval of the Chairman of the committee having jurisdiction and staff of the API Standards Dept. Copyright API. All rights reserved.

In the case of viscous oils, such as cutback and penetration-grade asphalts, where the danger of tank collapse resulting from sticking pallets or from plugging of flame arresters is greater than the possibility of flame transmission into the tank, open vents may be used as an exception to the requirements of 4.4.1.1; or heat traced vents that ensure that the vapor temperature stays above the dew point may be used.

In areas with strict fugitive emissions regulations, open vents might not be acceptable; internal floating cover/roof or vent-device selection should consider the maximum leakage requirements during periods of normal tank operation.

4.4.2 Emergency Venting

Emergency venting may be accomplished by the use of the following:

a) larger or additional open vents as limited by 4.4.1.4,

b) larger or additional PV valves,

c) a gauge hatch that permits the cover to lift under abnormal internal pressure,

d) a manhole cover that lifts when exposed to abnormal internal pressure,

e) weak (frangible) roof-to-shell attachment (see 4.3.3.2),

f) a rupture-disk device,

g) other forms of construction that can be proven to be comparable for the purposes of pressure relief.

4.5 Considerations for Tanks with Potentially Flammable Atmospheres

4.5.1 General

Depending on the process, operating conditions, and/or relieving conditions, the vapor space in the tank can be flammable. Ignition of the vapor space while within the flammable region likely leads to tank roof damage and/or loss of containment. Ignition sources include, but are not limited to, static discharge inside the tank due to splash filling or improper level gauging, pyrophoric materials on the inside surfaces of the tank, external hot work on the tank, tank or tank fittings above the auto-ignition temperature due to external fire exposure, or flame propagation through a tank opening or vent caused by a lightning strike or external fire. Consider the potential for a flammable atmosphere inside the tank and determine whether safeguards are adequate.

If explosion/deflagration venting is necessary, see 4.2.5.15.

4.5.2 Design Options for Explosion Prevention

If the tank's vapor space can be within the flammable range, the user shall determine what safeguards are required to prevent internal deflagration. The following are typical safeguards.

a) *Different Tank Selection*—A different type of tank design can reduce or eliminate the formation of a flammable atmosphere.

   EXAMPLES Floating-roof tank or a tank rated for full vacuum.

b) *Inert-gas Blanketing*—This is an effective means of reducing the likelihood of a flammable atmosphere inside a tank by replacing air with the inert-gas during inbreathing conditions, when engineered and maintained properly. Note that inerting can introduce an asphyxiation risk and in sour services can promote the formation of pyrophoric deposits.

BALLOT DRAFT

This document is not an API Standard; it is under consideration within an API technical committee but has not received all approvals required to become an API Standard. It shall not be reproduced or circulated or quoted, in whole or in part, outside of API committee activities except with the approval of the Chairman of the committee having jurisdiction and staff of the API Standards Dept. Copyright API. All rights reserved.

c) *Flame Arrester*—The use of this in an open vent line or on the inlet to the pressure/vacuum valve is an effective method to reduce the risk of flame transmission. The user is cautioned that a sustained fire on the outlet of the flame arrester not designed for endurance burning or on other parts of the tank/fittings may result in temperatures high enough to ignite internal flammable vapors. The use of high temperature alarms on flame arresters can provide warning of flame contact. In addition the use of a flame arrester within the tank's relief path introduces the risk of tank damage from overpressure or vacuum due to plugging if the arrester is not regularly inspected and maintained properly. The use of a flame arrester increases the pressure drop of the venting system. The manufacturer(s) should be consulted for assessing the magnitude of these effects. More information on flame arresters can be found in Annex H, ISO 16852 [30], NFPA 69 [15], TRbF 20 [16], TRGS 509 [38], FM 6061 [25], ISO/IEC 80079-49 [37], and USCG 33 *CFR* 154 [18].

   For the proper selection of a flame arrester, the piping configuration, operating pressure and temperature, oxygen concentration, compatibility of flame arrester material, and explosive gas group (IIA, IIB, etc.) with associated MESG (Maximum Experimental Safe Gap) should be considered. For selection of the correct flame arrester, the manufacturer should be consulted.

d) *Pressure/Vacuum Valve*—The petroleum industry has had good experience with tanks protected by pressure and vacuum vents without flame arresters. As a result, there has been a belief that this good experience is due to the pressure vents' potentially inherent flame-arresting capabilities. Recent testing, however, disproves this hypothesis at least for the tested conditions. See 4.5.4 for more information on flame propagation through pressure vents.

Safeguards c) and d) do not prevent ignition from electrostatics or instruments located in the tank vapor space. The user shall select the appropriate area classifications and means to avoid ignition from these sources.

4.5.3 Inert-gas-blanketed Tanks

An inert-gas system may be used to avoid drawing air into the tank during vacuum conditions. The use of inert-gas systems instead of a vacuum-relief device is beyond the scope of this standard. For tanks that use an inert-gas supply system, the likelihood of a potentially explosive atmosphere is reduced and there can be benefits related to a less severe hazardous area classification. See Annex F for a discussion of other benefits and for informative guidance for inert-gas blanketing of tanks for flashback protection. The venting devices shall be sized for the case where the inert gas is unavailable (see 4.3.1).

4.5.4 Flame Propagation Through Pressure/Vacuum Valves

Testing has demonstrated that a flame can propagate through a pressure/vacuum valve and into the vapor space of the tank. Tests have shown that ignition of a PV valve's relief stream (possibly due to a lightning strike) can result in a flashback to the PV valve with enough overpressure to lift the vacuum pallet, allowing the flame to enter the tank's vapor space. Other tests show that, under low-flow conditions, a flame can propagate though the pressure side of the PV; see Reference [22].

Flashbacks through PV valves are rare in the petroleum industry. The following are some factors that may explain this.

— The materials stored in most cone roof tanks often do not result in a flammable atmosphere in the tank.

— A lightning strike is likely to occur under conditions of cloud cover, so there is a reduced likelihood that the tank is out-breathing. However, it can still be out-breathing if liquid is entering.

— A lightning strike is almost always preceded by winds, which keeps the size of the flammable cloud near the PV valve to a minimum.

BALLOT DRAFT

This document is not an API Standard; it is under consideration within an API technical committee but has not received all approvals required to become an API Standard. It shall not be reproduced or circulated or quoted, in whole or in part, outside of API committee activities except with the approval of the Chairman of the committee having jurisdiction and staff of the API Standards Dept. Copyright API. All rights reserved.

4.6 Relief-device Specification

4.6.1 Sizing Basis

The pressure- and vacuum-relief device(s), including open vents, shall be suitable to pass the venting requirements for the largest single contingency or any reasonable and probable combination of contingencies (see 4.2.5 and 4.3.1).

When evaluating the overpressure scenarios in 4.2.5, the user should determine if the relief load should be handled using normal out-breathing relief devices or emergency venting. This can be an important consideration if the emergency venting is via a frangible roof or a nonreclosing relief device (e.g. rupture-disk or blow-off hatch).

A tank inerting system as described in 4.5.3 may be specified to avoid pulling air into the tank during vacuum conditions. No credit for these inerting systems shall be taken for the purpose of sizing the vacuum-relief device.

The inlet and outlet hydraulics can affect the relief-device sizing and shall be accounted for in the design of pressure and vacuum protection.

The basis for the sizing equations is explained in Annex D.

4.6.2 Pressure and Vacuum Setting

4.6.2.1 The set pressure and relieving pressure shall be consistent with the requirements of the standard according to which the tank was designed and fabricated. Under normal and emergency conditions, pressure-relieving devices shall have sufficient flow capacity to prevent the pressure (or vacuum) from exceeding the limits of the tank design code. Some standards present specific requirements.

4.6.2.2 Consultation between the tank designer, the person specifying the venting devices and the venting device manufacturer is strongly recommended to ensure that the venting devices are compatible with the tank design. It is often necessary that the set (start-to-open) pressure be lower than the design pressure of the tank to allow for adequate flow capacity of the devices. The operating pressure should be lower than the set pressure to allow for normal variations in pressure caused by changes in temperature and by other factors that affect pressure in the tank vapor space.

When designing inlet or outlet pipework for a pressure/vacuum relief valve, consider the influence of the following on the valve set pressure, the valve set vacuum, and on the flow rate:

a) flow resistance of pipes, bends, and installed equipment;

b) possible back-pressure or vacuum within the system.

4.6.2.3 The expected operating range of any pressure-control system on the tank should be considered relative to the vent's set point in order to avoid nuisance venting and/or vent seat leakage.

4.6.2.4 The pressure setting of a pressure-relieving device shall not exceed the maximum pressure that can exist at the level where the device is located when the pressure at the top of the tank equals the nominal pressure rating for the tank and the liquid contained in the tank is at the maximum design level. The static head from a vapor can be a significant value, especially if the vent discharge is piped to a high elevation above the tank.

4.6.2.5 For API 650 tanks not covered by API 650:2007, Appendix F, the pressure-relief devices selected should limit the pressure in the tank to prevent excessive lifting and flexing of the roofs of the tanks. Lifting and flexing of the roof of a tank is a condition that is determined by the weight of the roof. The total force caused by internal pressure should not exceed the weight of the roof and attachments, such as platforms and handrails.

BALLOT DRAFT

This document is not an API Standard; it is under consideration within an API technical committee but has not received all approvals required to become an API Standard. It shall not be reproduced or circulated or quoted, in whole or in part, outside of API committee activities except with the approval of the Chairman of the committee having jurisdiction and staff of the API Standards Dept. Copyright API. All rights reserved.

For example, the gauge pressure should be limited to approximately 350 Pa (3.5 mbar; 1.4 in H_2O) for a 4.76 mm ($^3/_{16}$ in.) carbon steel roof.

4.6.2.6 For tanks built to EN 14015, the set pressure of the valves shall be selected in such a way that at the required venting capacity, the design pressure is not exceeded.

4.6.2.7 In general, the set and relieving pressures for vacuum relief are established to prevent damage to a tank and shall limit vacuum to a level no greater than that for which a tank has been designed. The vacuum-relieving devices of a tank shall be set to open at a pressure or vacuum that ensures that the vacuum in the tank does not exceed the vacuum for which the tank is designed when the inflow of air through the devices is at its maximum specified rate.

4.6.3 Design

The pressure- or vacuum-relief device shall be designed so that it protects the tank in the event of failure of any essential part.

In cases where ambient conditions can result in accumulation of material that can prevent the valve from opening, such as freezing or polymerization occurring in the inlet or outlet of the valve, the user shall consider additional safeguards to prevent malfunction of the venting device.

4.6.4 Materials of Construction

Materials for a relief device and its associated piping shall be selected for the stored-product service temperatures and pressures at which the device and its piping are intended to operate. Also, the materials should be compatible with the product stored in the tank and with any products formed in the vicinity of the relief device during discharge.

4.7 Installation of Venting Devices and Open Vents

4.7.1 General

Pressure- and vacuum-relief devices and open vents shall be installed as follows.

a) The devices shall provide direct communication with the vapor space and not be sealed off by the liquid contents of the tank.

b) Any block valve or isolating device in the relief path shall be locked or sealed in the proper position. Where no spare relief devices are installed, this shall be done by locking or sealing these block valves open. Where spare relief devices are installed, then multiple-way valves, interlocked valves, or sealed block valves and operating procedures shall be used so that isolating one pressure- or vacuum-relief device does not reduce the remaining relief capacity below the required relief capacity.

c) Any isolation block valve (on the PV valve inlet) shall be full bore with its minimum flow area to be equal to or greater than the PV valve inlet area to minimize pressure losses and flow turbulence. Any isolation block valve on the PV valve outlet should be full bore. The isolation valves shall be suitable for the line service classification.

d) The design shall ensure that the inlet and outlet assemblies, including any block valves, permit the relief device to provide the required flow capacity. Inlet and outlet pressure losses developed during relief conditions shall be taken into account when sizing the pressure- and vacuum-relief devices. The inlet pipe penetration into the vessel, the pressure drop across any block valves used upstream of the venting device, and the inlet piping shall be considered when determining these losses.

BALLOT DRAFT

This document is not an API Standard; it is under consideration within an API technical committee but has not received all approvals required to become an API Standard. It shall not be reproduced or circulated or quoted, in whole or in part, outside of API committee activities except with the approval of the Chairman of the committee having jurisdiction and staff of the API Standards Dept. Copyright API. All rights reserved.

4.7.2 Discharge Piping

Discharge piping from the relief devices, common discharge headers, or open vents shall comply with the following.

a) It shall discharge to a safe location. The discharge point and orientation shall prevent accumulation of flammable vapors at grade or in enclosed spaces. In particular, downward directed or gooseneck type discharges should be avoided if there is a potential for large flammable vapor releases. The discharge point and orientation shall discharge in areas that prevent flame impingement on personnel, tanks, piping, equipment and structures. A number of standards (e.g. API 500 [27], TRbF 20 [16], TRGS 509 [38]. NFPA 30 [13], IEC 60079-10 [31]) provide considerations for determining safe discharge of storage tank relief streams.

b) It shall be protected against mechanical damage.

c) It shall exclude or remove atmospheric moisture and condensate from the relief devices and associated piping. This may be done by the use of loose-fitting rain caps or drains, but an accounting shall be made of the pressure loss effects of these items. Low-point drains, if provided, shall be oriented to prevent possible flame impingement on the tanks, piping, equipment, and structures. The selection of rain caps should be carefully considered to ensure that they do not obstruct the pressure- and/or vacuum-venting flow.

d) It shall prevent freezing of condensing vapor from the tank.

e) When a tank is located inside a building, the tank's venting devices shall discharge to the outside of the building. A weak roof-to-shell connection shall not be used as a means for emergency venting a tank inside a building.

f) Relief-device discharge lines from one or more tanks may be connected to a common discharge header, provided the header complies with the other provisions of this subsection. Liquid traps that can introduce sufficient back-pressure to prevent relief devices from functioning properly shall be avoided. Other vents, drains, bleeders, and relief devices shall not be tied into the common discharge header if back-pressures can be developed that prevent the relief devices on the tank from functioning properly. Back-pressures developed during relief conditions shall be taken into account when sizing the discharge header, sizing the relief devices, and compensating the set pressure. Consideration shall be given to the potential for the pressure/vacuum valve to allow fluid in the discharge header to enter a tank. The design of the system shall evaluate fluid compatibility and flame transmission issues including the potential need for a detonation arrester.

g) See ISO 16852 and ISO/IEC 80079-49 for correct application of flame arresters in vent discharge piping. Additional information on flame arresters can be found in NFPA 69, UL 525, TRGS 509, and TRbF 20.

h) All discharge piping shall be adequately supported and shall not impose excessive loading onto the relief device, either due to the mass of the pipe assembly or through the bending moments which occur during discharge.

4.7.3 Set Pressure Verification

The set pressure of all pressure- and vacuum-relief devices should be verified before the devices are placed in operation in accordance with the end user's standards and practices.

4.7.4 Installation

Installation procedures for pressure- and vacuum-relief devices shall consider the following.

BALLOT DRAFT

This document is not an API Standard; it is under consideration within an API technical committee but has not received all approvals required to become an API Standard. It shall not be reproduced or circulated or quoted, in whole or in part, outside of API committee activities except with the approval of the Chairman of the committee having jurisdiction and staff of the API Standards Dept. Copyright API. All rights reserved.

a) In some instances, weights may be shipped separately to prevent damage to internal components. Care should be taken to install the weights in accordance with the manufacturer's instructions.

b) Any external and/or internal packing that may have been installed for protection during shipment must be removed prior to use of the venting device.

c) Review of manufacturer's instruction manuals prior to installation.

4.7.5 Inspection and Maintenance

Inspection and maintenance of pressure and vacuum relief devices shall be performed in accordance with the end user's preventive maintenance guidelines and best practices. Inspection should be scheduled as dictated by the service conditions. Manufacturer's inspection and maintenance guidelines shall be considered.

5 Refrigerated Aboveground and Belowground Tanks

5.1 General

A refrigerated liquid-petroleum products storage tank can be the inner tank of a double-roof, double-wall tank; a double-wall tank with a suspended deck; or a single-wall tank with or without a suspended deck.

Section 4 covers the normal and emergency vapor venting requirements for refrigerated liquid-petroleum products storage tanks designed for operation within the pressure limits specified by the tank design code. This standard does not cover LNG storage. For refrigerated LNG tanks, see API 625 [32], NFPA 59A [14], or EN 1473 [26] for other requirements.

All causes of overpressure or vacuum discussed in Section 4 should be considered for refrigerated tanks, except where noted in 5.2.1. In addition, Section 5 covers other sources of overpressure unique to refrigerated tanks.

5.2 Causes of Overpressure or Vacuum

5.2.1 Modified Guidelines

5.2.1.1 General

For refrigerated tanks, consider all of the causes of overpressure or vacuum discussed in Section 4, except where noted below.

For pressure relief scenarios, the calculated vapor/gas flow will be at the actual pressure and temperature conditions of the tank vapor space. This relief flow shall be converted to an air-equivalent flow at normal or standard conditions. Annex D.9 provides more information on performing this conversion.

For vacuum relief scenarios, the calculated flows assume ambient air flow through the tank vent. It is typical practice to assume the ambient air is at normal or standard conditions. If a medium other than air is used for vacuum relief, then it may be necessary to convert the rate to an air equivalent flow.

5.2.1.2 Atmospheric Pressure Changes

A rise or drop in barometric pressure is a possible cause of vacuum or overpressure in a tank. This is usually insignificant for nonrefrigerated tanks; however, it should be considered for refrigerated tanks since the material is being stored close to its boiling point. A change in atmospheric pressure can result in a substantial amount of vaporization or condensation.

If the pressure in the tank is equal to maximum operating pressure, a drop in atmospheric pressure can cause overpressure from the expansion of vapor in the enclosed vapor space, V_{AG}, and vapor evolved from the

BALLOT DRAFT

This document is not an API Standard; it is under consideration within an API technical committee but has not received all approvals required to become an API Standard. It shall not be reproduced or circulated or quoted, in whole or in part, outside of API committee activities except with the approval of the Chairman of the committee having jurisdiction and staff of the API Standards Dept. Copyright API. All rights reserved.

overheat of the liquid, $\dot{V}_{AL}$. Similarly, a vacuum condition can arise following an increase in atmospheric pressure.

The flow rate due to vapor expansion $\dot{V}_{AG}$, expressed in cubic meters per hour (cubic feet per hour) under the actual conditions of pressure and temperature of the enclosed vapor space, can be calculated using Equation (20):

$$\dot{V}_{AG} = \frac{V_{tk}}{p} \cdot \frac{dp_{atm}}{dt} \tag{20}$$

where

V_{tk} is the maximum gaseous cubic capacity of the empty tank, expressed in cubic meters (cubic feet);

p is the absolute operating pressure, expressed in pascals (psia);

$\frac{dp_{atm}}{dt}$ is the absolute value of rate of variation in atmospheric pressure, expressed in pascals per hour (psi per hour).

The flow rate due to the de-superheating of liquid, $\dot{V}_{AL}$, may be estimated by adapting the methods given in 5.2.1.3 for the calculation of the fractional proportion of the liquid, X_{gas}, that vaporizes instantaneously.

Total flow rate $\dot{V}_A$ is the sum of that caused by vapor expansion and that caused by flashing, as given by Equation (21):

$$\dot{V}_A = \dot{V}_{AG} + \dot{V}_{AL} \tag{21}$$

Local data for the rate of atmospheric pressure change should be used. Where there are no local data available, a change in atmospheric pressure of 2000 Pa/h (0.3 psi/h) with total variation of 10 kPa (1.5 psi) may be assumed.

5.2.1.3 Liquid Movement

The inbreathing/out-breathing due to liquid movement associated with a nonrefrigerated tank is described in 4.3.2.2. For a refrigerated tank, the user should assess the amount of product that flashes as it enters the tank. Flashing of the feed liquid can be significant for fluids that are at or above their bubble point (or boiling point) temperature at the pressure in the tank. Consider doing a flash calculation when near the bubble point temperature. Vapors generated during the filling operation can also come from a warm fill, from an inlet-piping heat leak, inlet pump work, cool down of the tank and fill line, and vapors displaced by the incoming liquid. The amount of flashing should be calculated rather than assumed.

If the refrigerated product is initially at equilibrium, the fractional proportion of liquid, X_{gas}, that vaporizes instantaneously due to a temperature before expansion higher than that of the bubble point of the stored refrigerated product may be approximated by the simplified equation given as Equation (22):

BALLOT DRAFT

This document is not an API Standard; it is under consideration within an API technical committee but has not received all approvals required to become an API Standard. It shall not be reproduced or circulated or quoted, in whole or in part, outside of API committee activities except with the approval of the Chairman of the committee having jurisdiction and staff of the API Standards Dept. Copyright API. All rights reserved.

$$X_{\text{gas}} = 1 - \exp\left[\frac{C_{\text{p}} \cdot (T_2 - T_1)}{L}\right] \tag{22}$$

where

C_{p} is the specific heat capacity of the fluid, expressed in J/kg·K (Btu/lb·°F)

T_2 is the boiling-point temperature of the fluid at the pressure of the tank, expressed K (°F);

T_1 is the temperature of the fluid before expansion, expressed in K (°F);

L is the latent heat of vaporization of the fluid, expressed in J/kg (Btu/lb)

Consequently, the vapor generation rate in mass flow units, $\dot{V}_{\text{F}}$, is calculated using Equation (23):

$$\dot{V}_{\text{F}} = X_{\text{gas}} \cdot \dot{m}_{\text{pf}} \tag{23}$$

where $\dot{m}_{\text{pf}}$ is the filling flow rate, expressed in mass flow units.

In the absence of more precise data, for absolute pressure drops ≤ 100 kPa (14.5 psi), the following values and Equation (24) or Equation (25) may be used:

$$C_{\text{p}} = 3.53 \cdot 10^3 \text{ J/(kg·K)}$$

$$L = 504 \cdot 10^3 \text{ J/kg}$$

$$(T_2 - T_1) = \frac{(p_2 - p_1)}{8000} \tag{24}$$

where $(p_2 - p_1)$ represents the absolute pressure change of the refrigerated product between the initial storage pressure (p_1) and the pressure of the destination tank (p_2), expressed in pascals. In USC units, the following values and Equation (25) may be used:

C_{p} = 0.843 Btu/(lb°F)

L = 217 Btu/lb

$$(T_2 - T_1) = 1.6(p_2 - p_1) \tag{25}$$

where $(p_2 - p_1)$ is expressed in psi.

The proper sizing and design of the refrigeration and vapor collection systems should prevent vacuum and overpressure due to liquid movement into or out of the tank, but credit for this should not be taken for the vacuum/pressure relief system design (see loss of refrigeration, 5.2.2.2).

BALLOT DRAFT

This document is not an API Standard; it is under consideration within an API technical committee but has not received all approvals required to become an API Standard. It shall not be reproduced or circulated or quoted, in whole or in part, outside of API committee activities except with the approval of the Chairman of the committee having jurisdiction and staff of the API Standards Dept. Copyright API. All rights reserved.

5.2.1.4 Fire Exposure

In 4.3.3 are described the venting requirements relating to the external fire exposure of nonrefrigerated storage tanks. This approach should be taken for calculating venting requirements due to fire, with the exception that the method shown in 4.3.3.3.3 shall not be used since those requirements are based on hexane or similar products.

For a double-wall refrigerated storage tank, the heat input from a fire initially causes the vapors in the space between the walls of a double-wall tank to expand. The heat input also causes the vapors in the roof space of a double-wall tank with suspended-deck insulation to expand; however, it can be several hours before the increased heat input into the stored liquid causes a significantly increased vaporization rate. The venting requirements for handling the increased vaporization can be small compared to the requirements for handling the initial volumetric expansion of the vapors. Because emergency venting for a double-wall refrigerated storage tank is complex, no calculation method is presented here. A thorough analysis of the fire relief for a double-wall refrigerated storage tank, including a review of the structural integrity of unwetted portions of the outer wall, should be conducted.

5.2.2 Additional Guidelines for Overpressure

5.2.2.1 General

Other sources of overpressure unique to refrigerated tanks shall be considered and may include

a) loss of refrigeration,

b) heat input due to pump recirculation,

c) evaporation due to ambient heat input,

d) rollover,

e) overpressure of the annular space of a double-wall tank.

5.2.2.2 Loss of Refrigeration

Loss of refrigeration can result in overpressure. Calculation of the relief loads depends on the type of refrigeration system and the extent of the equipment failure. For the loss-of-refrigeration scenario, all credible simultaneous heat inputs to the system shall be considered. See ISO 23251 for assumptions for calculating these relief loads.

5.2.2.3 Heat Input Due to Pump Recirculation

Heat input due to pump recirculation can cause vaporization, which requires relief. Normally, this is included in the design of the refrigeration system. If the pump recirculation is not included in the design of the refrigeration system, then this can be a relief scenario.

5.2.2.4 Evaporation Due to Ambient Heat Input

Vapors generated due to heat input into the storage tank from the ground and ambient conditions are normally included in the design of the refrigeration system. If this is not the case, then this vapor load can be a relief scenario.

BALLOT DRAFT

This document is not an API Standard; it is under consideration within an API technical committee but has not received all approvals required to become an API Standard. It shall not be reproduced or circulated or quoted, in whole or in part, outside of API committee activities except with the approval of the Chairman of the committee having jurisdiction and staff of the API Standards Dept. Copyright API. All rights reserved.

5.2.2.5 Rollover

Ambient heat input into storage tanks that can have a stratification due to different product gravities (resulting from compositional and/or temperature differences) can result in a sudden mixing or "rollover" that leads to rapid vaporization. There are no generally recognized methods available for rigorously calculating the relief load for this scenario (EN 1473, however, provides guidelines for establishing rollover-relief loads if no model is used). Proper design and operation of the storage system to avoid stratification are typically relied on to prevent this scenario. If the rollover potential exists and the design and operating safeguards are not adequate to avoid this scenario, then the user shall consider overpressure due to rollover.

5.2.2.6 Overpressure of the Annular Space of a Double-wall Tank

For full containment, double-wall tanks, the introduction of a refrigerated product into the annular tank space and subsequent vaporization of that product can result in overpressure of that annular tank space. Introduction of refrigerated product can occur due to leakage or overfilling leading to spillage into the annular space. The instantaneous vaporization of the refrigerated product entering the annular space shall be considered.

A hole having a diameter of 20 mm (0.8 in.) in the bottom course of the tank shell may be assumed for the purposes of calculating leakage rates for overpressure protection. See EN 14620 (all parts) for more information.

5.2.3 Additional Guidelines for Vacuum

5.2.3.1 General

Other sources of vacuum unique to refrigerated tanks shall be considered and can include maximum refrigeration loads (see 5.2.3.2).

5.2.3.2 Maximum Refrigeration Loads

Refrigeration systems are designed either to cool the liquid contents or condense the tank vapors. The user should, as a minimum, evaluate the case where the refrigeration system is operated at maximum conditions with minimum normal heat and/or vapor generation gain within the storage tank (e.g. maximum refrigeration with no liquid flow into the tank and minimum heat gain from the environment).

5.3 Relief-device Specification

The methods described in 4.6 are applicable to refrigerated storage tanks.

5.4 Installation of Venting Devices

5.4.1 General

The methods described in 4.7 are applicable to refrigerated storage tanks, except as modified below.

5.4.2 Installation of Pressure- and Vacuum-relief Devices

The devices shall keep cold vapor from producing a thermal gradient in the roof of the tank or reducing the temperature in the roof of the tank. For a tank with the suspended-deck-type roof insulation system, the inlet piping to the relief valve shall penetrate the suspended deck to prevent cold vapor from entering the warm space between the outer roof and the suspended deck. The influence of this piping shall be considered in the relief valve capacity calculations. Relief valves should be sized for the pressure available across the valve. Consideration should be given to the inlet pressure losses and the back-pressure developed on the outlet flange.

BALLOT DRAFT

This document is not an API Standard; it is under consideration within an API technical committee but has not received all approvals required to become an API Standard. It shall not be reproduced or circulated or quoted, in whole or in part, outside of API committee activities except with the approval of the Chairman of the committee having jurisdiction and staff of the API Standards Dept. Copyright API. All rights reserved.

5.4.3 Discharge Piping

5.4.3.1 Discharge piping from the relief devices or common discharge headers shall be arranged to discharge to open air unobstructed so that any impingement of escaping cold gas upon the container and any roof-mounted items is prevented.

5.4.3.2 A venting-device discharge stack or vent shall be designed and installed to prevent water, ice, snow, or other foreign matter from accumulating and obstructing the flow. The discharge shall be directed upwards when relieving to the atmosphere. Independent support of the vertical stack should be considered. Provisions shall be made to reduce the thermal effects on the container and any roof-mounted items caused by the ignition of vapor from the relief valve discharge stack.

6 Testing of Venting Devices

6.1 General

Establish the flow capacity of pressure/vacuum valves by one of the methods described in 6.3. Perform the tests using test facilities, methods, and procedures meeting the requirements of 6.2 and national regulations (e.g. ASME PTC 25). These methods shall apply to pressure and/or vacuum valves (end-of-line valves and in-line valves). These methods may apply to free vents (open vents having screens and weather caps).

The test report shall describe how the venting device is mounted and tested as well as describe the inlet and outlet piping. If any fluid other than air is used in the test, the name of the fluid actually used along with the fluid's temperature and its specific gravity at standard conditions shall be noted in the test report.

If pressure and/or vacuum devices are combined with flame arresters, carry out the tests with the combined devices.

Carry out the tests with air or other suitable gases.

Convert test results with other fluids or different conditions to air at the conditions specified below.

Flow-capacity curves or equations shall refer to air at one of the following sets of conditions:

- normal conditions: temperature, 0 °C (32 °F); pressure, 101.3 kPa (1.013 bar; 14.69 psi); density, 1.29 kg/m^3 (0.080 lb/ft^3);
- standard conditions: temperature, 15.6 °C (60 °F); pressure, 101.3 kPa (1.013 bar; 14.69 psi); density, 1.22 kg/m^3 (0.076 lb/ft^3);
- temperature, 20 °C (68 °F); pressure, 101.3 kPa (1.013 bar; 14.69 psi); density, 1.20 kg/m^3 (0.075 lb/ft^3).

6.2 Flow-test Apparatus

6.2.1 General

The test apparatus shown in Figure 1 is suitable for free vents, end-of-line venting devices, and in-line devices.

6.2.2 Test Medium Supply

The test medium supply (Figure 1, Key Item 1) shall be a blower or a fan or other sources of energy.

BALLOT DRAFT

This document is not an API Standard; it is under consideration within an API technical committee but has not received all approvals required to become an API Standard. It shall not be reproduced or circulated or quoted, in whole or in part, outside of API committee activities except with the approval of the Chairman of the committee having jurisdiction and staff of the API Standards Dept. Copyright API. All rights reserved.

6.2.3 Flow-measuring Device

Calibrate the flow-measuring device (Figure 1, Key Item 2) in accordance with the manufacturer's quality system, but at a minimum every five years and in accordance with national regulations.

6.2.4 Test Tank

For the test tank (Figure 1, Key Item 3), take the following into account.

a) The average flow velocity within the tank shall be ≤2.0 m/s (6.6 ft/s); configure the test tank to prevent high-velocity jets from impinging on the pressure-measuring device (Figure 1, Key Item 4) or on the venting device (Figure 1, Key Item 7) or from creating pressure differentials within the tank.

b) Pulsations that can possibly be generated by the test medium supply shall be dampened to avoid errors in flow metering.

c) In order to minimize the effect of entrance losses, mount the venting device being tested (Figure 1, Key Item 7) on top of the test tank.

d) Mount the venting device on a straight-pipe that has the same nominal diameter as the test device, and a length, l_{con}, of 1.5 times the nominal diameter. It shall be placed vertically with its end flush with the inside of test tank. Rounding of the entrance edge shall not exceed a radius of 0.8 mm (0.031 in.).

e) For testing vacuum valves, reverse the flow direction, i.e. air is drawn through the test device into the test tank.

BALLOT DRAFT

This document is not an API Standard; it is under consideration within an API technical committee but has not received all approvals required to become an API Standard. It shall not be reproduced or circulated or quoted, in whole or in part, outside of API committee activities except with the approval of the Chairman of the committee having jurisdiction and staff of the API Standards Dept. Copyright API. All rights reserved.

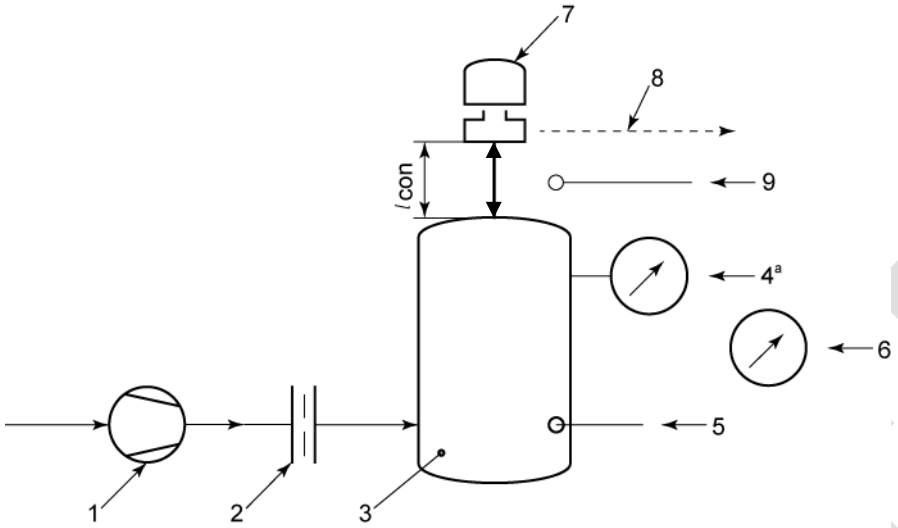

Key

1	test medium supply (e.g. blower or fan)	7	device to be tested
2	calibrated flow-measuring device	8	pipe-away, if fitted
3	test tank	9	atmospheric-temperature- and dew-point-measuring devices
4	calibrated measuring device(s) for pressure and vacuum	l_{con}	length of connecting pipe (straight pipe nipple)
5	temperature-measuring device		
6	barometer: measuring device for atmospheric pressure		

[a] Pressure and vacuum measurement may be achieved with separate instruments.

Figure 1—Test Apparatus for Flow Testing of Venting Devices

6.2.5 Pressure/Vacuum-measuring Device

Calibrate the pressure- and vacuum-measuring devices (Figure 1, Key Item 4) in accordance with the manufacturer's quality system and national regulations.

6.2.6 Temperature-measuring Device

Calibrate the devices for measuring the temperature (Figure 1, Key Items 5 and 9) in accordance with the manufacturer's quality system and national regulations.

6.2.7 Barometer

The barometer (Figure 1, Key Item 6) is used to measure atmospheric pressure.

6.3 Method for Determining Capacities

6.3.1 Open Vents

Starting with zero flow, measure the tank pressure or vacuum in five equal steps up to the maximum value of 5 kPa (0.725 psi).

BALLOT DRAFT

This document is not an API Standard; it is under consideration within an API technical committee but has not received all approvals required to become an API Standard. It shall not be reproduced or circulated or quoted, in whole or in part, outside of API committee activities except with the approval of the Chairman of the committee having jurisdiction and staff of the API Standards Dept. Copyright API. All rights reserved.

6.3.2 Pressure and Vacuum Valves

6.3.2.1 Flow-curve Method

Determine the flow-capacity curves for each type of device and for every nominal size.

Test each venting device at its minimum design pressure and vacuum set points and at the highest design pressure and vacuum set points of the device or the limits of the flow-testing facility, whichever is limiting. Test at least three intermediate settings, including those given in paragraph four of this subsection, for both vacuum and pressure. Make incremental flow-rate changes sufficient for establishing a flow-capacity curve for each vacuum or pressure set point. These data may also be used to establish a flow-capacity curve for set pressures or vacuums greater than the maximum values tested, provided it can be demonstrated that the extrapolation of the data is valid. This is the case if at least three measuring points are determined after the valve has reached its fully open position provided it can be demonstrated the flow remains subsonic.

Start measuring the tank pressure or vacuum at the corresponding adjusted valve setting (zero flow) and continue in appropriate steps until the maximum value or fully open position is reached.

The volume flow should be measured at tank pressures of 1.1 times, 1.2 times, 1.5 times, and 2 times the adjusted set pressure or vacuum. If the fully open position of the valve disk is not achieved at two times the adjusted valve setting, additional measuring points are required until the fully open position is reached.

Plot the capacity curves for volume flow against tank pressure or vacuum (flow-rate/pressure curves, flow-rate/vacuum curves) or present the data in tables that show the flow relative to the tank pressure. Express pressures in kilopascals (bars, millibars, millimeters of water, ounces per square inch, pounds per square inch, or inches of water).

State the overpressure or set pressure.

NOTE The flow-capacity curves apply for clean devices; conditions, such as device fouling, that can reduce capacity are not considered.

6.3.2.2 Coefficient of Discharge Method

6.3.2.2.1 Specific Design of Three or More Sizes

For different devices having a specific design with geometrically similar flow paths, a coefficient of discharge can be established for the range of venting devices by using the following procedure. The testing results can be extrapolated to include valves either smaller or larger than the valves used in the test program, providing that geometric similarity exists between the tested device and the predicted device.

Geometric similarity can be said to exist when the ratios of flow path and the dimensions of parts that can affect the overall thrust exercised by the medium on the moving parts within the relief device are scaled with the corresponding dimensions of the valves used in the capacity testing.

Test at least three devices for each of three different sizes (a total of nine devices), each at a different pressure. At least one of the test pressures shall be the minimum design pressure or vacuum for the design and one of the test pressures shall be the maximum design pressure or vacuum. The other test pressures shall be evenly distributed between the minimum and maximum design pressures. All of the test pressures shall be those where the full open position is reached.

Determine the coefficient of discharge, K, of the device for each test as given by Equation (26):

$$K = \frac{q_{\mathrm{a}}}{q_{\mathrm{th}}} \tag{26}$$

BALLOT DRAFT

This document is not an API Standard; it is under consideration within an API technical committee but has not received all approvals required to become an API Standard. It shall not be reproduced or circulated or quoted, in whole or in part, outside of API committee activities except with the approval of the Chairman of the committee having jurisdiction and staff of the API Standards Dept. Copyright API. All rights reserved.

where

q_a is the test flow rate;

q_{th} is the theoretical flow rate, determined in consistent units: expressed in SI units of normal cubic meters per hour of the test medium (typically air) as given by Equation (27) or in USC units of SCFH of the test medium (typically air) as given by Equation (28):

$$q_{th} = 125.15 p_i \cdot A_{min} \cdot \sqrt{\left(\frac{1}{M \cdot Z_i \cdot T_i}\right) \cdot \left(\frac{k}{k-1}\right) \cdot \left[\left(\frac{p_o}{p_i}\right)^{\frac{2}{k}} - \left(\frac{p_o}{p_i}\right)^{\frac{k+1}{k}}\right]} \quad (27)$$

where

A_{min} is the minimum flow area of the device, expressed in cm^2;

p_i is the absolute pressure at device inlet, expressed in kPa;

p_o is the absolute pressure at device outlet, expressed in kPa;

k is the ratio of specific heats of the test medium at the test conditions;

T_i is the absolute temperature at device inlet, expressed in K;

M is the relative molecular mass of the test medium; kg/kmol;

Z_i is the compressibility factor evaluated at inlet conditions (if unknown, use $Z = 1.0$).

$$q_{th} = 278{,}700 \cdot p_i \cdot A_{min} \cdot \sqrt{\left(\frac{1}{M \cdot Z_i \cdot T_i}\right) \cdot \left(\frac{k}{k-1}\right) \cdot \left[\left(\frac{p_o}{p_i}\right)^{\frac{2}{k}} - \left(\frac{p_o}{p_i}\right)^{\frac{k+1}{k}}\right]} \quad (28)$$

where

A_{min} is the minimum flow area of the device, expressed in $in.^2$;

p_i is the absolute pressure at device inlet, expressed in psia;

p_o is the absolute pressure at device outlet, expressed in psia;

k is the ratio of specific heats of the test medium at test conditions;

T_i is the absolute temperature at device inlet, expressed in °R;

M is the relative molecular mass of the test medium; lb/lb-mol;

Z_i is the compressibility factor evaluated at inlet conditions (if unknown, use $Z = 1.0$).

Plot a best-fit curve of the coefficient of discharge of the devices tested versus the absolute pressure ratio across each device. All measured coefficients shall fall within ± 5 % of the curve (see Figure 2). Calculate the

BALLOT DRAFT

This document is not an API Standard; it is under consideration within an API technical committee but has not received all approvals required to become an API Standard. It shall not be reproduced or circulated or quoted, in whole or in part, outside of API committee activities except with the approval of the Chairman of the committee having jurisdiction and staff of the API Standards Dept. Copyright API. All rights reserved.

flow capacity for any pressure within the test pressure range by multiplying the theoretical flow for that pressure ratio by 95 % of the corresponding coefficient of discharge for that pressure ratio as determined by the best-fit curve.

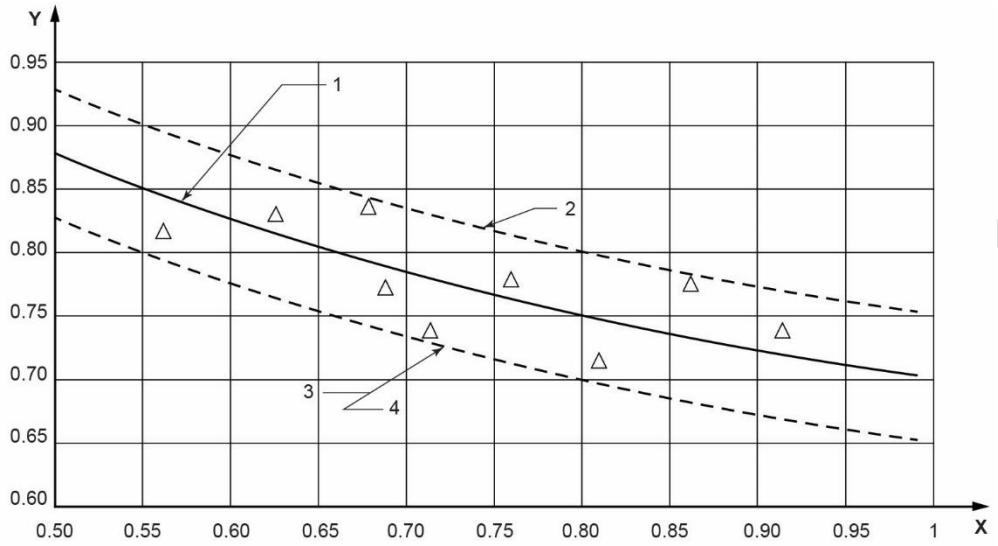

Key

X absolute pressure ratio, p_o/p_i

Y coefficient of discharge, K

1 best-fit curve of measured coefficients

2 maximum limit (105 % of best-fit curve values)

3 minimum limit (95 % of best-fit curve values)

4 valve coefficient of discharge for published capacity

Figure 2—Typical Ratio Limits for Capacity Testing of Venting Devices Using the Coefficient of Discharge Method

6.3.2.2.2 Individual Valve

A coefficient of discharge can be established for each size of device by using the following procedure.

Test four devices for each combination of pipe size and orifice size, each at a different pressure. At least one of the test pressures shall be the minimum design pressure or vacuum and one of the test pressures shall be the maximum design pressure or vacuum. Distribute the other test pressures evenly between the minimum and maximum design pressures. All of the test pressures shall be those where lift of the seat disk is sufficient for the nozzle to control the flow or where the seat disk lifts to a fixed stop.

Determine the coefficient of discharge for each device as described in 6.3.2.2.1. Plot a best-fit curve of the coefficient of discharge of the devices tested versus the absolute pressure ratio across each device. All measured coefficients shall fall within $\pm$ 5 % of the curve. Calculate the flow capacity for any pressure within the test pressure range by multiplying the theoretical flow described in 6.3.2.2.1 for that pressure by 95 % of the corresponding coefficient of discharge for that pressure ratio as determined by the best-fit curve.

6.3.3 Calculation Method—Manhole Covers

The flow capacity at any pressure in which the full lift of a manhole occurs can be calculated by multiplying the theoretical flow described in 6.3.2.2.1 by 0.5.

This document is not an API Standard; it is under consideration within an API technical committee but has not received all approvals required to become an API Standard. It shall not be reproduced or circulated or quoted, in whole or in part, outside of API committee activities except with the approval of the Chairman of the committee having jurisdiction and staff of the API Standards Dept. Copyright API. All rights reserved.

6.4 Production Testing

6.4.1 General

The manufacturer shall test leak rate and the adjusted set pressure for each pressure/vacuum relief device. Testing shall be performed on test stands that meet the following conditions.

a) The valve shall be connected to an accumulator tank sized to minimize the impact of dynamic effects.

b) The pressure drop between the accumulator and the test valve shall be negligible.

c) The pressure shall be measured in the accumulator tank.

d) The maximum flow rate of the gas supply to the accumulator tank shall be greater than the specified PV valve leak criteria and substantially less than the capacity of the PV valve.

e) The flange on which the vent is mounted shall be level.

6.4.2 Leak-rate Test

Verify the maximum leak rate for pressure/vacuum vents by one of the following methods.

a) The measured leak rate shall be less than the value specified in Table 10 at 75 % of the adjusted set pressure.

b) The measured inlet pressure shall be greater than 75 % of the adjusted set pressure at the maximum leak rate specified in Table 10.

Table 10—Maximum Allowable Leak Rates

Vent Size mm (in.)	**Maximum Allowable Leak Rate** m^3/h (CFH)
≤150 (6)	0.014 (0.5)
200 to 400 (8 to 16)	0.142 (5.0)
>400 (16)	0.566 (20.0)

If greater seat tightness is required, the purchaser shall specify this in the purchase order.

For pilot-operated valves, the maximum leak rate shall be in accordance with ISO 4126-4.

6.4.3 Method of Determining Adjusted Set Pressure

The flow-test apparatus shall limit the maximum flow rate into the accumulator such that a drop in the pressure measured at the accumulator tank can be observed when the relief device set pressure is reached. Given this, for pressure vents, the adjusted set pressure shall be the pressure at which any further increase in flow rate no longer causes a rise in pressure. For vacuum vents, the adjusted set vacuum shall be the pressure at which any further increase in flow rate no longer causes a fall in pressure.

For pilot-operated valves, the adjusted set pressure shall be in accordance with ISO 4126-4.

BALLOT DRAFT

This document is not an API Standard; it is under consideration within an API technical committee but has not received all approvals required to become an API Standard. It shall not be reproduced or circulated or quoted, in whole or in part, outside of API committee activities except with the approval of the Chairman of the committee having jurisdiction and staff of the API Standards Dept. Copyright API. All rights reserved.

7 Manufacturer's Documentation and Marking of Venting Devices

7.1 Documentation

A certificate shall be issued by the manufacturer or supplier of the venting equipment recording the set pressure, the set vacuum and the flow rate at the indicated overpressure or the tank design pressure, and tank design vacuum.

The certificate shall also include the following at a minimum: product description and results of all required production testing as per 5.4.

A flow rate/pressure loss diagram (flow capacity curve) or coefficient of discharge for the relief valve shall be supplied. Where a flame or detonation arrester is directly combined with a separate pressure and/or vacuum valve, a flow rate/pressure loss diagram for the combination shall be provided.

7.2 Marking

7.2.1 General Requirements

Each venting device (open vents, pressure and/or vacuum valves, or pilot-operated valves) shall be marked with all the required data. The marking shall be stamped onto, etched in, impressed on, or cast in the valve or on a plate(s) securely fastened to the valve.

7.2.2 Open Vents

The marking shall include the following as a minimum:

a) name or identifying trademark of the manufacturer;

b) manufacturer's design or type number;

c) pipe size of the device inlet;

d) rated capacity for the tank design pressure and tank design internal negative pressure, in normal cubic meters per hour (SCFH) of air.

7.2.3 Pressure-relief Valves

The marking shall include the following as a minimum:

a) name or identifying trademark of the manufacturer;

b) manufacturer's design or type number;

c) pipe size of the device inlet;

d) set pressure, in kilopascals (millibars, pounds per square inch, ounces per square inch, or inches of water column);

e) rated capacity at the indicated relieving pressure (gauge), in normal cubic meters per hour (SCFH) of air;

f) relieving pressure (gauge).

BALLOT DRAFT

This document is not an API Standard; it is under consideration within an API technical committee but has not received all approvals required to become an API Standard. It shall not be reproduced or circulated or quoted, in whole or in part, outside of API committee activities except with the approval of the Chairman of the committee having jurisdiction and staff of the API Standards Dept. Copyright API. All rights reserved.

7.2.4 Vacuum-relief Valves

The marking shall include the following as a minimum:

a) name or identifying trademark of the manufacturer;

b) manufacturer's design or type number;

c) pipe size of the device inlet;

d) set vacuum in kilopascals (millibars, pounds per square inch, ounces per square inch, or inches of water column);

e) rated capacity at the indicated relieving vacuum, in normal cubic meters per hour (SCFH) of air;

f) relieving vacuum.

7.2.5 Combined Pressure/Vacuum-relief Valves

Each combined pressure/vacuum relief valve shall be marked in the manner described in 6.2.3 and 6.2.4.

7.2.6 Venting Devices with Flame Arresters

Flame arresters or detonation arresters shall be marked per ISO 16852, ISO/IEC 80079-49, USCG 33 CFR Part 154, or FM 6061.

BALLOT DRAFT

This document is not an API Standard; it is under consideration within an API technical committee but has not received all approvals required to become an API Standard. It shall not be reproduced or circulated or quoted, in whole or in part, outside of API committee activities except with the approval of the Chairman of the committee having jurisdiction and staff of the API Standards Dept. Copyright API. All rights reserved.

Annex A
(informative)

Alternative Calculation of Normal Venting Requirements

A.1 General

A.1.1 This annex provides a calculation method that may be used to quantify the normal venting requirements of storage tanks.

A.1.2 These venting requirements are applicable for storage tanks that meet all of the following service conditions:

— the volume of the tank is less than 30,000 m^3 (180,000 bbl);

— the maximum operating temperature of the vapor space of the tank is 48.9 °C (120 °F);

— the tank is uninsulated;

— the temperature of the tank contents and feed to the tank are less than the boiling-point temperature at the maximum operating pressure of the tank.

NOTE The effect of the cooling of the vapor space is the contraction of the vapors within the vapor space. For tanks containing vapors that can condense upon cooling, the temperature of the liquid within the tank is not expected to change as rapidly; therefore, the vapor pressure is expected to be maintained by the evaporation of the liquid. The condensation of vapors can be significant when little or no bulk liquid exists in the tank, such as during steam-out, and the calculation methodology given in this annex is **not** valid for the additional volume change caused by the condensation of vapors.

A.1.3 For tanks that do not satisfy all of the above service conditions, the user should quantify the normal venting requirements using the method described in 4.3.2.

A.1.4 It is the user's responsibility to determine if this method is used for sizing vents for new or existing tanks.

A.2 Experience

A.2.1 The method for quantifying normal venting requirements as described in this annex has been used in the United States and other countries since around 1940. The applications have covered the full range of storage tanks found in both exploration and production facilities and petrochemical plants. The use of this method usually results in smaller vacuum relief flow requirements than the method described in 4.3.2.

A.2.2 Some tank failures/damage due to vacuum have occurred with petroleum storage tanks, with their root causes involving one or more of the following; see Reference [19]:

— cooling of the vapor space at elevated temperatures, i.e. significantly greater than 48.9 °C (120 °F);

— condensation of vapors within the tank due to cooling heat transfer, such as condensation of the steam after a steam-out operation;

— restriction or blockage of air flow, such as blockage of the vents by a plastic bag.

BALLOT DRAFT

This document is not an API Standard; it is under consideration within an API technical committee but has not received all approvals required to become an API Standard. It shall not be reproduced or circulated or quoted, in whole or in part, outside of API committee activities except with the approval of the Chairman of the committee having jurisdiction and staff of the API Standards Dept. Copyright API. All rights reserved.

A.2.3 Operational experience with typical petrochemical storage tank applications indicates that tank failures/damage due to vacuum have not been caused by inadequate venting when that relief system is designed using the guidance in this annex.

A.2.4 The introduction of a more rigorous method of quantifying tank normal venting flows (4.3.2) does not require re-evaluation of storage tank vents which were sized by the method in this annex. Such storage tanks that change service may still use the method described in this annex provided that the service conditions described in A.1 are met. The rationale that such storage tank vents do not need to be reevaluated using the method in 4.3.2 is as follows.

- The method described in 4.3.2 has the following conservative assumptions that may not reflect typical conditions.
    - The tank vapor space is not likely to be homogeneously mixed (i.e. bulk mixing) as is assumed.
    - The effective heat transfer coefficient may be smaller than assumed because it will be a function of temperature and location in the tank. Smaller enclosed spaces can exhibit heat-transfer rates that are lower than those assumed in the model.
    - The model does not take into account that the rate of vapor contraction is reduced once air is introduced via the vacuum valve.
- The likelihood that vacuum relief requirements would actually exceed values in this annex is low for the following reasons.
    - Storage tanks are usually not operated completely empty. In these cases, a conservative premise in both methods is the tank is empty and is full of air prior to cool down. In practice, petrochemical storage tanks usually have some minimum inventory. The liquid inventory provides a source of heat to offset vapor contraction and thus would reduce vacuum relief requirement during cool down.
    - Total venting requirements include maximum liquid movement, which can be significant for petrochemical storage tank applications, and this typically does not occur simultaneously with a peak cooling event.
- The likelihood that a tank with PV valves sized using the method in this annex would be damaged due to inadequate vacuum relief is low for the following reasons:
    - Actual vacuum capacity of storage tanks may be higher than the stamped pressures because of as-built tank construction.
    - Tank vacuum capacity may be higher due to stiffening effects of the tank's liquid inventory
    - For tanks that have low design pressures, typically the PV valve size is governed by the out-breathing requirements, which results in equal sized vacuum valve (since the pressure and vacuum valve is often integral).

A.3 Normal Venting Requirements

A.3.1 General

A.3.1.1 Normal venting requirements shall be at least the sum of the venting requirements for liquid movement and for thermal effects. These normal venting requirements are based on the maximum expected venting that can occur during normal operation of the tank and are given for the following conditions:

a) normal inbreathing resulting from the maximum outflow of liquid from the tank (liquid-transfer effects),

BALLOT DRAFT

This document is not an API Standard; it is under consideration within an API technical committee but has not received all approvals required to become an API Standard. It shall not be reproduced or circulated or quoted, in whole or in part, outside of API committee activities except with the approval of the Chairman of the committee having jurisdiction and staff of the API Standards Dept. Copyright API. All rights reserved.

b) normal inbreathing resulting from contraction or condensation of vapors caused by maximum decrease in vapor-space temperature (thermal effects),

c) normal out-breathing resulting from maximum inflow of liquid into the tank and maximum vaporization caused by such inflow (liquid-transfer effects),

d) normal out-breathing resulting from expansion and vaporization that result from the maximum increase in vapor-space temperature (thermal effects).

A.3.1.2 Although design guidelines are not presented in this annex for other circumstances, they should, nonetheless, be considered as indicated in the body of this standard.

A.3.1.3 A summary of the venting requirements for inbreathing and out-breathing due to liquid movement out of and into a tank and the thermal effects are shown in Table A.1 and Table A.2. These requirements are discussed in A.3.4.1 and A.3.4.2.

A.3.1.4 The inbreathing and out-breathing requirements were calculated using air at standard conditions as a basis. This annex shows these venting requirements for air at both standard and normal conditions. It is important to note that the reference temperature for standard conditions [15.6 °C (60 °F)] is not the same as the reference temperature for normal conditions [0 °C (32 °F)]. The conversion between standard and normal conditions has been incorporated when reporting the results in the different unit systems. The user is cautioned that the volumetric rates reported in the different unit systems might not appear to be equivalent because of this temperature conversion.

The inbreathing requirements as presented in this annex assume venting from ambient air. If a medium other than air is used for vacuum relief, then it may be necessary to convert the rate to an air equivalent flow. See D.9.

The out-breathing requirements as presented in this annex assume the vapor/gas under the actual pressure and temperature conditions of the tank vapor space is the equivalent to air at standard conditions. The venting rates are based on tank relieving temperatures of up to and including 49 °C (120 °F). Where the relieving temperature is greater 49 °C (120 °F) then the method in 4.3.2 should be used instead of the method described in this annex.

A.3.2 Liquid Movement

A.3.2.1 The rate of change in volume caused by liquid movement shall be considered in the determination of the normal venting requirements. The primary sources of these changes in volume are the following:

— actual volumetric displacement by the movement of liquid into or out of the tank;

— generation of vapors by volatile liquids entering the tank, if applicable.

A.3.2.2 For the actual volumetric displacement caused by the movement of the liquid, the volumetric rate of movement of the liquid, usually by means of pumping, is used to calculate the venting requirements.

It is important to note that the change of volume is commonly converted to equivalent volumetric rates in terms of air at standard or normal conditions. As a result, the volumetric rates might not appear to be an equivalent displacement especially when assuming operating temperature or ambient temperatures that are not equivalent to standard or normal conditions.

BALLOT DRAFT

This document is not an API Standard; it is under consideration within an API technical committee but has not received all approvals required to become an API Standard. It shall not be reproduced or circulated or quoted, in whole or in part, outside of API committee activities except with the approval of the Chairman of the committee having jurisdiction and staff of the API Standards Dept. Copyright API. All rights reserved.

Table A.1—Normal Venting Requirements
(Expressed in SI Units)

Dimensions in Nm^3/h of air per m^3/h of liquid flow

Flash Point/ boiling Point [a] °C	Inbreathing		Out-breathing	
	Liquid Movement out	Thermal	Liquid Movement in	Thermal
Flash point ≥ 38	0.94	[b]	1.01	[b]
Boiling point ≥ 150	0.94	[b]	1.01	[b]
Flash point < 38	0.94	[b]	2.02	[b]
Boiling point < 150	0.94	[b]	2.02	[b]

[a] Data on either flash point or boiling point may be used. Where both are available, use the flash point.

[b] See Table A.3.

Table A.2—Normal Venting Requirements
(Expressed in USC Units)

Dimensions in SCFH of air per barrel/h of liquid flow

Flash Point/ Boiling Point [a] °F	Inbreathing		Out-breathing	
	Liquid Movement out	Thermal	Liquid Movement in	Thermal
Flash point ≥ 100	5.6	[b]	6	[b]
Boiling point ≥ 300	5.6	[b]	6	[b]
Flash point < 100	5.6	[b]	12	[b]
Boiling point < 300	5.6	[b]	12	[b]

[a] Data on either flash point or boiling point may be used. Where both are available, use the flash point.

[b] See Table A.4.

A.3.2.3 For the generation of vapors caused by volatile liquids entering the tank, the amount of vapor generated should be estimated for the calculation of venting requirements.

For typical petroleum fluids, a liquid having a flash point less than 37.8 °C (100 °F) may be considered volatile. In the absence of flash point characteristics, the atmospheric boiling point may be used. In this case, a liquid having a boiling point less than 148.9 °C (300 °F) may be considered a volatile liquid.

For typical petroleum fluids, the vapor generation rate may be estimated as 0.5 % of the incoming liquid. The evaporation rate of approximately 0.5 % is selected on the basis of gasoline being pumped into an essentially empty tank. During this period, heat pickup is considered to be at a maximum. Also, any vapor flashing as a result of hot line products (e.g. the pipeline being exposed to the sun) is the most critical at this time, since there is no large heat sink such as that which exists in a full tank. In addition, vaporization is increased since there is essentially no tank pressure to suppress vaporization. For conversion of hydrocarbon vapor to air, a density of 1.5 times that of air is arbitrarily selected.

Significantly higher vaporization rates can occur if the liquid feed to the tank has a temperature above the boiling point at the operating pressure of the tank. For instance, with hexane, 0.4 % of the feed can vaporize for every 0.6 K (1.0 °R) above the boiling point at the tank pressure.

A.3.2.4 Note that protection against liquid overfilling is not covered in this annex.

BALLOT DRAFT

This document is not an API Standard; it is under consideration within an API technical committee but has not received all approvals required to become an API Standard. It shall not be reproduced or circulated or quoted, in whole or in part, outside of API committee activities except with the approval of the Chairman of the committee having jurisdiction and staff of the API Standards Dept. Copyright API. All rights reserved.

Table A.3—Normal Venting Requirements for Thermal Effects
(Expressed in SI Units)

Tank Capacity	Inbreathing	Out-breathing	
Column 1 [a]	Column 2 [b]	Column 3 [c]	Column 4 [d]
		Flash Point ≥ 37.8 °C or Normal Boiling Point ≥ 149 °C	Flash Point < 37.8 °C or Normal Boiling Point < 149 °C
m^3	Nm^3/h of air	Nm^3/h of air	Nm^3/h of air
10	1.69	1.01	1.69
20	3.38	2.02	3.38
100	16.9	10.1	16.9
200	33.8	20.3	33.8
300	50.4	30.4	50.4
500	84.5	50.7	84.5
700	118	71.0	118
1,000	169	101	169
1,500	254	152	254
2,000	338	203	338
3,000	507	304	507
3,180	537	322	537
4,000	647	388	647
5,000	787	472	787
6,000	896	538	896
7,000	1,003	602	1,003
8,000	1,077	646	1,077
9,000	1,136	682	1,136
10,000	1,210	726	1,210
12,000	1,345	807	1,345
14,000	1,480	888	1,480
16,000	1,615	969	1,615
18,000	1,750	1,047	1,750
20,000	1,877	1,126	1,877
25,000	2,179	1,307	2,179
30,000	2,495	1,497	2,495

[a] Interpolation is allowed for intermediate tank capacities. Tanks with a capacity of more than 30,000 m^3 are not covered by this annex. Industry practice has been to use the maximum liquid volume (volume excluding the tank roof) for determining thermal in/out breathing. The values in this column are not derived by conversion of Table A.4; instead they are chosen to be close to those volumes in Table A.4 and the venting requirements are based on direct calculations using the volumes chosen.

[b] For information regarding the basis for these calculations, refer to A.3.3.

[c] For stocks with a flash point of 37.8 °C or above, the out-breathing requirement has been assumed to be 60 % of the inbreathing requirement. For information regarding the basis for these calculations, refer to A.3.3.

[d] For stocks with a flash point below 37.8 °C, the out-breathing requirement has been assumed to be equal to the inbreathing requirement to allow for vaporization at the liquid surface and for the higher specific gravity of the tank vapors. For information regarding the basis for these calculations, refer to A.3.3.

BALLOT DRAFT

This document is not an API Standard; it is under consideration within an API technical committee but has not received all approvals required to become an API Standard. It shall not be reproduced or circulated or quoted, in whole or in part, outside of API committee activities except with the approval of the Chairman of the committee having jurisdiction and staff of the API Standards Dept. Copyright API. All rights reserved.

Table A.4—Normal Venting Requirements for Thermal Effects
(Expressed in USC Units)

Tank Capacity		Inbreathing	Out-breathing	
Column 1 [a]		Column 2 [b]	Column 3 [c]	Column 4 [d]
			Flash Point ≥ 100 °F or Normal Boiling Point ≥ 300 °F	Flash Point < 100 °F or Normal Boiling Point < 300 °F
Bbl	gal	SCFH air	SCFH air	SCFH air
60	2,500	60	40	60
100	4,200	100	60	100
500	21,000	500	300	500
1,000	42,000	1,000	600	1,000
2,000	84,000	2,000	1,200	2,000
3,000	126,000	3,000	1,800	3,000
4,000	168,000	4,000	2,400	4,000
5,000	210,000	5,000	3,000	5,000
10,000	420,000	10,000	6,000	10,000
15,000	630,000	15,000	9,000	15,000
20,000	840,000	20,000	12,000	20,000
25,000	1,050,000	24,000	15,000	24,000
30,000	1,260,000	28,000	17,000	28,000
35,000	1,470,000	31,000	19,000	31,000
40,000	1,680,000	34,000	21,000	34,000
45,000	1,890,000	37,000	23,000	37,000
50,000	2,100,000	40,000	24,000	40,000
60,000	2,520,000	44,000	27,000	44,000
70,000	2,940,000	48,000	29,000	48,000
80,000	3,360,000	52,000	31,000	52,000
90,000	3,780,000	56,000	34,000	56,000
100,000	4,200,000	60,000	36,000	60,000
120,000	5,040,000	68,000	41,000	68,000
140,000	5,880,000	75,000	45,000	75,000
160,000	6,720,000	82,000	50,000	82,000
180,000	7,560,000	90,000	54,000	90,000

[a] Interpolation is allowed for intermediate tank capacities. Tanks with a capacity of more than 180,000 bbl are not covered by this annex. Industry practice has been to use the maximum liquid volume (volume excluding the tank roof) for determining thermal in/out breathing.

[b] For information regarding the basis for these calculations, refer to A.3.3.

[c] For stocks with a flash point of 100 °F or above, the out-breathing requirement has been assumed to be 60 % of the inbreathing requirement. For information regarding the basis for these calculations, refer to A.3.3.

[d] For stocks with a flash point below 100 °F, the out-breathing requirement has been assumed to be equal to the inbreathing requirement to allow for vaporization at the liquid surface and for the higher specific gravity of the tank vapors. For information regarding the basis for these calculations, refer to A.3.3.

BALLOT DRAFT

This document is not an API Standard; it is under consideration within an API technical committee but has not received all approvals required to become an API Standard. It shall not be reproduced or circulated or quoted, in whole or in part, outside of API committee activities except with the approval of the Chairman of the committee having jurisdiction and staff of the API Standards Dept. Copyright API. All rights reserved.

A.3.3 Thermal Effects

A.3.3.1 Changes in volume caused by thermal effects shall be considered in the determination of the normal venting requirements. The primary sources of these changes in volume are the following:

— changes in ambient temperatures that result in heat transfer with the vapor space,

— changes in internal liquid temperatures that result in heat transfer with the vapor space.

A.3.3.2 For typical petroleum fluids, the heat transfer with the vapor space is not expected to result in condensation of the vapors themselves, especially when the vapor space contains a significant amount of noncondensable gases. The lack of condensation of the vapors during cooling is an essential assumption in the application of the guidance in this annex.

A.3.3.3 In many situations, the rapid cooling caused by sudden changes in ambient conditions is a controlling case for the heat transfer to the vapor space within the tank. The rate of change in volume is maximized at the maximum vapor-space volume and the maximum operating temperature; therefore, the tank is considered to be empty and at its maximum operating temperature for this calculation.

It was established that, in the southwestern United States, tanks can be cooled rapidly, as happens when a sudden rainstorm occurs on a hot, sunny day. For vacuum conditions, it was found that roof plates can be cooled by as much as 33 K (60 °R) and that shell plates can be cooled by approximately 17 K (30 °R).

Heat transfer occurs from the vapor space in the tank to the cooled surfaces, which may be treated as isothermal surfaces as the rainwater is expected to provide sufficient cooling on the exterior surfaces of the tank. The heat transfer from the vapor space may be characterized by free convection. The heat-transfer coefficient is the key variable in this calculation, yet it is both difficult to predict accurately and imprecise as the choice of correlations used to establish the heat-transfer coefficient is very dependent on the fluids, physical configurations, and scales involved.

The cooling of the vapor space may be based solely on a maximum heat-transfer rate or a maximum temperature change rate. With the inherent uncertainty in the heat-transfer coefficient, the use of these two boundary conditions is not expected to introduce any additional unacceptable uncertainties.

A maximum heat-transfer rate of 63 W/m^2 (20 Btu/h·ft^2) may be used as a boundary condition.

A maximum temperature change rate of 56 K/h (100 °R/h) may be used as a boundary condition.

The volumetric rate of change, $\dot{V}$, due to thermal effects can be calculated using Equations (A.1), (A.2), and (A.3).

$$\dot{V} = \frac{n \cdot R_g}{p} \cdot \frac{dT}{d\tau} \tag{A.1}$$

$$\dot{V} = \frac{V_{tk}}{T_0} \cdot \frac{dT}{d\tau} \tag{A.2}$$

$$\dot{V} = \frac{R_g}{p} \cdot \frac{h \cdot A_{exp} \cdot \Delta T}{C_p} \tag{A.3}$$

where

$\dot{V}$ is the volumetric rate of change in m^3/s (ft^3/h).

BALLOT DRAFT

This document is not an API Standard; it is under consideration within an API technical committee but has not received all approvals required to become an API Standard. It shall not be reproduced or circulated or quoted, in whole or in part, outside of API committee activities except with the approval of the Chairman of the committee having jurisdiction and staff of the API Standards Dept. Copyright API. All rights reserved.

n is the number of moles initially in the tank vapor space in kgmol (lbmol);

R_g is the ideal gas constant 8.3145 kPa•m^3/kgmol•K (1545 ft•lbf / °R•lbmol);

p is the absolute pressure within the tank, which is typically assumed to be atmospheric pressure for the purposes of calculation in kPa (lbf/ft^2);

T is temperature in °C (°F);

τ is time in s (h);

T_0 is the initial temperature, which is assumed to be 48.9 °C (120 °F);

ΔT is the maximum temperature differential, calculated as $T_0 - T_w$;

T_w is the wall temperature, which is assumed to be 15.6 °C (60 °F);

h is the heat-transfer coefficient in W/m^2•K (Btu/h•ft^2•°R);

A_{exp} is the exposed surface area in m^2 (ft^2);

C_p is the molar heat capacity at constant pressure in J/kgmol•K (Btu•lbmol•°R);

V_{tk} is the tank volume in m^3 (ft^3).

For tanks smaller than 3180 m^3 (20,000 bbl), the venting requirement due to thermal contraction is limited by the maximum temperature change of 56 K/h (100 °R/h) in the tank's vapor space. Using an initial temperature of 48.9 °C (120 °F), the venting requirement is approximately equal to 0.169 Nm^3 of air per cubic meter (1 SCFH of air per barrel) of empty tank volume.

For tanks equal to, or larger than, 3180 m^3 (20,000 bbl), the venting requirement due to thermal contraction is limited by the heat-transfer rate ($h\ \Delta T$) of 63 W/m^2 (20 Btu/h·ft^2). The venting rates shown in Table A.3 and Table A.4 for tanks larger than 3180 m^3 (20,000 bbl) are determined by first calculating the venting rate for the largest tank shown. The venting rate for a 30,000 m^3 (180,000 bbl) tank assumes a surface area of 4324 m^2 (45,000 ft^2), a heat-transfer rate of 63 W/m^2 (20 Btu/h·ft^2), an initial temperature of 48.9 °C (120 °F), and fluid properties of air as the typical gas in the vapor space of the tank at atmospheric pressure. The calculated venting requirement is approximately equal to 0.61 m^3/h of air per square meter (2 ft^3/h of air per square foot) of exposed surface area. For the largest tank, this corresponds to a maximum temperature change of 28 K/h (50 °R/h) in the tank's vapor space. The venting rates for tanks with capacities between 3180 m^3 (20,000 bbl) and 30,000 m^3 (180,000 bbl) are estimates based on venting rates set by the two tank sizes.

For extremely large tanks having volumes greater than 30,000 m^3 (180,000 bbl), the heat transfer is expected to be more complex than the simplifications presented here, and the user should refer to the main body of this standard for more appropriate guidance.

The external ambient conditions are assumed to be at standard conditions of 15.6 °C and 101.3 kPa (60 °F and 14.7 psia) for the purposes of the calculations in the tables above.

A.3.3.4 For heat transfer from ambient conditions resulting in an increase of temperature in the vapor space, the volumetric expansion rate is expected to be much slower than the contraction rate as the heating of ambient air does not occur as rapidly. In these cases, the increase in temperature of the vapor space caused by the liquid temperature can have a greater impact; however, this necessarily means a partially filled tank. In addition, the increase in liquid temperature can result in some vaporization of the residual liquid if that liquid is volatile.

BALLOT DRAFT

This document is not an API Standard; it is under consideration within an API technical committee but has not received all approvals required to become an API Standard. It shall not be reproduced or circulated or quoted, in whole or in part, outside of API committee activities except with the approval of the Chairman of the committee having jurisdiction and staff of the API Standards Dept. Copyright API. All rights reserved.

The volumetric expansion rate may be estimated as 60 % of the volumetric contraction rate caused by ambient heat transfer for nonvolatile liquids, and may be estimated at 100 % of the volumetric contraction rate for volatile liquids.

In establishing the basis above, it is recognized that the requirements for out-breathing are somewhat conservative; however, some conservatism is believed to be desirable to take into account both unusual climatic conditions and products that can generate more vapor than gasoline generates. Also, the cost involved for a larger venting device is very small, considering the overall cost of a tank. This conservatism also provides some margin of safety if the liquid entry rates slightly exceed the design rates.

A.3.4 Determination of Normal Venting Requirements

A.3.4.1 Inbreathing (Vacuum Relief)

A.3.4.1.1 The requirement for venting capacity for maximum liquid movement out of a tank should be equivalent to 0.94 Nm^3/h of air per cubic meter (5.6 SCFH of air per barrel) per hour of maximum emptying rate for liquids of any flash point.

This calculation is a direct conversion of U.S. barrels to cubic feet.

A.3.4.1.2 The requirement for venting capacity for thermal inbreathing for a given tank capacity for liquids of any flash point should be at least that shown in column 2 of Table A.3 or Table A.4.

For tanks having a volume less than 3180 m^3 (20,000 bbl), this calculation is based on the cooling of an empty tank initially at 48.9 °C (120 °F) at a maximum rate of temperature change of 56 K/h (100 °R/h) and is essentially equivalent to 0.169 Nm^3 per cubic meter (1 SCFH per barrel) of empty tank volume.

For tanks having a volume greater than 3180 m^3 (20,000 bbl), this calculation is based on an estimated requirement of 0.577 Nm^3/h per square meter (2 SCFH per square foot) of exposed surface area using typical tank sizes for those volumes.

A.3.4.2 Out-breathing (Pressure Relief)

A.3.4.2.1 Liquids Having a Flash Point of 37.8 °C (100 °F) or Above

The requirement for venting capacity for maximum liquid movement into a tank and the resulting vaporization for liquid with a flash point of 37.8 °C (100 °F) or above, or a normal boiling point of 148.9 °C (300 °F) or above, should be equivalent to 1.01 Nm^3/h per cubic meter per hour (6 SCFH of air per barrel per hour) of maximum filling rate.

The requirement for venting capacity for thermal out-breathing, including thermal vaporization, for a given tank capacity for liquid with a flash point of 37.8 °C (100 °F) or above, or a normal boiling point of 148.9 °C (300 °F) or above, should be at least that shown in column 3 of Table A.3 or Table A.4.

This calculation is equivalent to 60 % of the inbreathing requirements for thermal effects.

A.3.4.2.2 Liquids Having a Flash Point Below 37.8 °C (100 °F)

The requirement for venting capacity for maximum liquid movement into a tank and the resulting vaporization for liquid with a flash point below 37.8 °C (100 °F) or a normal boiling point below 148.9 °C (300 °F) should be equivalent to 2.02 Nm^3/h per cubic meter per hour (12 SCFH of air per barrel per hour) of maximum filling rate.

The requirement for venting capacity for thermal out-breathing, including thermal vaporization, for a given tank capacity for liquid with a flash point below 37.8 °C (100 °F) or a normal boiling point below 148.9 °C (300 °F) should be at least that shown in column 4 of Table A.3 or Table A.4.

BALLOT DRAFT

This document is not an API Standard; it is under consideration within an API technical committee but has not received all approvals required to become an API Standard. It shall not be reproduced or circulated or quoted, in whole or in part, outside of API committee activities except with the approval of the Chairman of the committee having jurisdiction and staff of the API Standards Dept. Copyright API. All rights reserved.

This calculation is equivalent to 100 % of the inbreathing requirements for thermal effects.

BALLOT DRAFT

This document is not an API Standard; it is under consideration within an API technical committee but has not received all approvals required to become an API Standard. It shall not be reproduced or circulated or quoted, in whole or in part, outside of API committee activities except with the approval of the Chairman of the committee having jurisdiction and staff of the API Standards Dept. Copyright API. All rights reserved.

Annex B
(informative)

Basis of Emergency Venting for Table 7 and Table 8

The emergency venting requirements contained in the First Edition of API 2000 are based on the assumption that a tank subjected to fire exposure absorbs heat at an average rate of 18,900 W/m^2 (6000 Btu/h·ft^2) of wetted surface. The minimum emergency relief capacity, given as the approximate diameter of a free circular opening, is computed from the results of a detailed analysis of the distillation characteristics of a typical straight-run gasoline from a U.S. Midcontinent crude oil, using a conventional orifice equation, an orifice coefficient of 0.7, and a vapor specific gravity of 2.5. An emergency venting capacity of 17,400 m^3/h (648,000 ft^3/h) was the maximum required for any tank, regardless of size. This maximum emergency venting capacity is based on the fact that tanks with a capacity of more than 2780 m^3 (17,500 bbl), when heated, require such a long period of time before their contents reach a temperature at which rapid boiling starts that it is extremely unlikely that this point would ever be reached, and even if it were, there would be ample time to take the necessary precautions to safeguard life and property.

This basis for emergency venting was adopted by the National Fire Protection Association (NFPA) and has been used successfully for many years. As far as can be determined, except for some containers of unusually small capacities, no case has been recorded in which a tank failed from overpressure because of insufficient emergency venting capacity when vented in accordance with this basis.

A few catastrophic tank ruptures did, however, occur in cases in which the emergency venting was not in accordance with this basis. These tank ruptures focused attention on the emergency venting requirements. Many small-scale fire tests demonstrate that heat inputs of more than 18,900 W/m^2 (6000 Btu/h·ft^2) of surface can be obtained under ideal conditions; however, large-scale test data were lacking. In June 1961, during fire demonstrations in Tulsa, Oklahoma, a horizontal tank measuring 2.44 m × 7.18 m (8 ft × 26 ft 10 in.) was equipped with an emergency venting device sized to limit the internal gauge pressure of the tank to approximately 0.75 kPa (3 in. H_2O). Measurements indicated that under exposure to fire, the gauge pressure rose to approximately 11 kPa (44 in. H_2O). Based on these tests, it was agreed that emergency venting requirements should be reexamined. As a result of this study, the current basis for heat input under exposure to fire was developed.

Table 7 and Table 8 are based on the composite curve shown in Figure B.1, which is composed of four straight-line segments when plotted on log-log graph paper. The curve can be defined in the following manner.

The straight-line segment 1 is drawn between 117,240 W (400,000 Btu/h) at 1.86 m^2 (20 ft^2) of wetted surface area and 1,172,400 W (4,000,000 Btu/h) at 18.6 m^2 (200 ft^2) of wetted surface area. For this portion of the curve, the total heat input Q_1, expressed in SI units of watts, is given by Equation (B.1) and expressed in USC units of British thermal units per hour by Equation (B.2):

$$Q_1 = 63{,}150 A_{\mathrm{TWS}} \tag{B.1}$$

where A_{TWS} is the area of the wetted surface, expressed in square meters.

$$Q_1 = 20{,}000 A_{\mathrm{TWS}} \tag{B.2}$$

where A_{TWS} is the area of the wetted surface, expressed in square feet.

The straight-line segment 2 is drawn between 1,172,400 W (4,000,000 Btu/h) at 18.6 m^2 (200 ft^2) of wetted surface area and 2,916,000 W (9,950,000 Btu/h) at 92.9 m^2 (1000 ft^2) of wetted surface area. For this portion

BALLOT DRAFT

This document is not an API Standard; it is under consideration within an API technical committee but has not received all approvals required to become an API Standard. It shall not be reproduced or circulated or quoted, in whole or in part, outside of API committee activities except with the approval of the Chairman of the committee having jurisdiction and staff of the API Standards Dept. Copyright API. All rights reserved.

of the curve, the total heat input Q_2, expressed in SI units of watts, is given by Equation (B.3) and expressed in USC units of British thermal units per hour by Equation (B.4):

$$Q_2 = 224{,}200\ (A_{TWS}^{0.566}) \quad \text{(B.3)}$$

where A_{TWS} is the area of the wetted surface, expressed in square meters.

$$Q_2 = 199{,}300\ (A_{TWS}^{0.566}) \quad \text{(B.4)}$$

where A_{TWS} is the area of the wetted surface, expressed in square feet.

The straight-line segment 3 is drawn between 2,916,000 W (9,950,000 Btu/h) at 92.9 m^2 (1000 ft^2) of wetted surface area and 4,129,700 W (14,090,000 Btu/h) at 260 m^2 (2800 ft^2) of wetted surface area. For this portion of the curve, the total heat input Q_3, expressed in SI units of watts, is given by Equation (B.5) and expressed in USC units of British thermal units per hour by Equation (B.6):

$$Q_3 = 630{,}400\ (A_{TWS}^{0.338}) \quad \text{(B.5)}$$

where A_{TWS} is the area of the wetted surface, expressed in square meters.

$$Q_3 = 963{,}400\ (A_{TWS}^{0.338}) \quad \text{(B.6)}$$

where A_{TWS} is the area of the wetted surface, expressed in square feet.

For nonrefrigerated tanks designed for gauge pressures of 6.89 kPa (1 psi) and below, with wetted surfaces larger than 260 m^2 (2800 ft^2), it has been concluded that complete fire involvement is unlikely and loss of metal strength from overheating causes failure in the vapor space before development of the maximum possible rate of vapor evolution. Therefore, additional venting capacity beyond the vapor equivalent of 4,129,700 W (14,090,000 Btu/h) is not effective; see Key Item 5 in Figure (B.1).

For all refrigerated tanks, regardless of design pressure, and for all nonrefrigerated tanks and storage vessels designed for gauge pressures over 6.89 kPa (1 psi), additional venting for exposed surfaces larger than 260 m^2 (2800 ft^2) is believed to be desirable because, under these storage conditions, liquids are often stored at temperatures close to their boiling points. Therefore, the time required to bring these liquids to the boiling point might not be significant. For these situations, described by the straight-line segment 4, the total heat input Q_4, expressed in SI units of watts, is given by Equation (B.7) and expressed in USC units of British thermal units per hour by Equation (B.8):

$$Q_4 = 43{,}200\ (A_{TWS}^{0.82}) \quad \text{(B.7)}$$

where A_{TWS} is the area of the wetted surface, expressed in square meters.

$$Q_4 = 21{,}000\ (A_{TWS}^{0.82}) \quad \text{(B.8)}$$

where A_{TWS} is the area of the wetted surface, expressed in square feet.

The total emergency venting requirements are based on the heat input values described in Equations (B.1) to (B.8). The venting requirements, q, on the assumption that the stored liquids have the characteristics of hexane and the venting occurs at 15.6 °C (60 °F), are derived from the heat input values, Q, as given by Equation (B.9) for SI units, with q expressed in normal cubic meters of air per hour and Q expressed in watts, and by Equation (B.10) for USC units, with q expressed in standard cubic feet of air per hour and Q expressed in British thermal units per hour:

BALLOT DRAFT

This document is not an API Standard; it is under consideration within an API technical committee but has not received all approvals required to become an API Standard. It shall not be reproduced or circulated or quoted, in whole or in part, outside of API committee activities except with the approval of the Chairman of the committee having jurisdiction and staff of the API Standards Dept. Copyright API. All rights reserved.

$$q = 14{,}982\frac{Q}{L \cdot M^{0.5}} \tag{B.9}$$

where

Q is the total heat input, expressed in watts, as determined from Figure B.1 using the calculated wetted surface, A_{TWS};

L is the latent heat of vaporization of the liquid at relieving conditions in the tank, expressed in joules per kilogram;

M is the relative molecular mass of the vapor being relieved;

$14{,}982$ is the factor to convert the vaporization rate, expressed in kilograms per second (hexane), to the air venting rate, expressed in normal cubic meters per hour.

In Equation (16), the constant 208.2 is derived from Equation (B.9), for Q equal to 43,200 $A_{\mathrm{TWS}}{}^{0.82}$ W [from Equation (B.7)], L equal to 334,900 J/kg, and M (for hexane) equal to 86.17.

In USC units:

$$q = 70.5\frac{Q}{L \cdot M^{0.5}} \tag{B.10}$$

where

Q is the total heat input, as determined from Figure B.1 using the calculated wetted surface A_{TWS}, expressed in British thermal units per hour;

L is the latent heat of vaporization of the liquid at relieving conditions in the tank, expressed in British thermal units per pound;

M is the relative molecular mass of the vapor being relieved;

70.5 is the factor for converting pounds per hour of vapor generated to standard cubic feet per hour of air vented.

In Equation (17), the constant 1107 is derived from Equation (B.10), for Q equal to 21,000 $A_{\mathrm{TWS}}{}^{0.82}$ Btu/h [from Equation (B.8)], L equal to 144 Btu/lb, and M (for hexane) equal to 86.17.

No consideration has been given to possible expansion from heating the vapor above the boiling point of the liquid, the specific heat of the vapor, or the difference in density between the discharge temperature and 15.6 °C (60 °F) because some of these changes are compensating.

Because of some concerns expressed about the differences in various methods for determining fire-case venting requirements and a desire to standardize one method, the API Subcommittee surveyed approximately 100 companies from 1993 to 1996. This survey indicates that there is no detectable difference in the level of safety provided by using the fire-sizing methods found in this standard, API 520, ISO 23251, NFPA documents, or other commonly used fire-case venting calculation methods. The API Subcommittee abandoned efforts to standardize the industry on one method for determining fire-case venting requirements in 1996.

NOTE For the purposes of this provision, API 521 is equivalent to ISO 23251.

BALLOT DRAFT

This document is not an API Standard; it is under consideration within an API technical committee but has not received all approvals required to become an API Standard. It shall not be reproduced or circulated or quoted, in whole or in part, outside of API committee activities except with the approval of the Chairman of the committee having jurisdiction and staff of the API Standards Dept. Copyright API. All rights reserved.

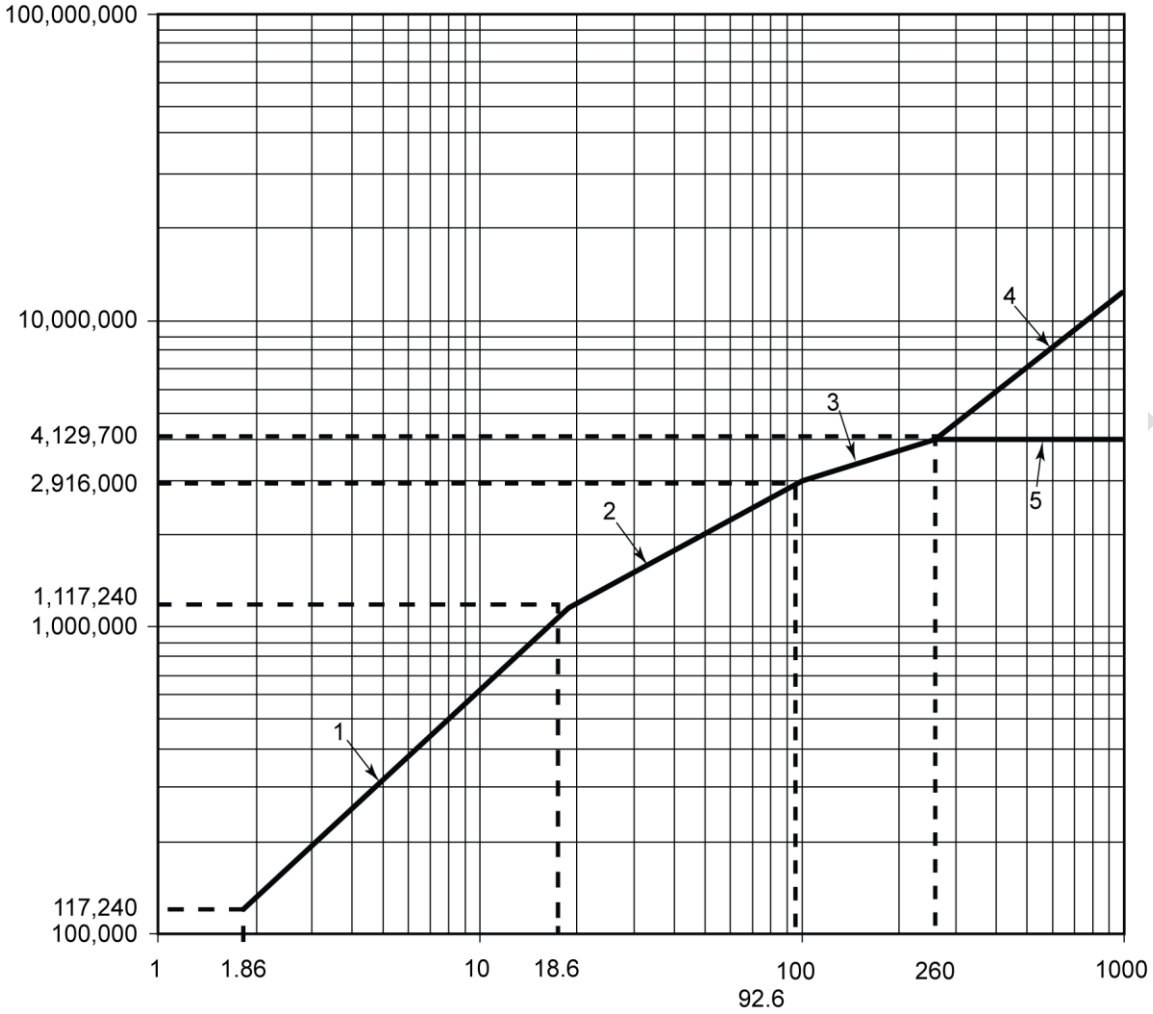

Key

X wetted surface area, expressed in square meters

Y heat absorption, expressed in watts

1 straight-line segment 1: (in SI units) $Q_1 = 63{,}150 A_{TWS}$

2 straight-line segment 2: (in SI units) $Q_2 = 224{,}200\ (A_{TWS}{}^{0.566})$

3 straight-line segment 3: (in SI units) $Q_3 = 630{,}400\ (A_{TWS}{}^{0.338})$

4 straight-line segment 4: (in SI units) $Q_4 = 43{,}200\ (A_{TWS}{}^{0.82})$

5 vapor equivalent of 4,129,700 W, point beyond which additional venting capacity is not effective

NOTE Above 260 m^2 of wetted surface area, the total heat absorption is considered to remain constant for nonrefrigerated tanks below a gauge pressure of 6.89 kPa. For nonrefrigerated tanks above this pressure, and for all refrigerated tanks, the total heat absorption continues to increase with wetted surface area. This is the reason why the curve splits above 260 m^2.

Figure B.1—Curve for Determining Requirements for Emergency Venting During Fire Exposure (SI Units)

This document is not an API Standard; it is under consideration within an API technical committee but has not received all approvals required to become an API Standard. It shall not be reproduced or circulated or quoted, in whole or in part, outside of API committee activities except with the approval of the Chairman of the committee having jurisdiction and staff of the API Standards Dept. Copyright API. All rights reserved.

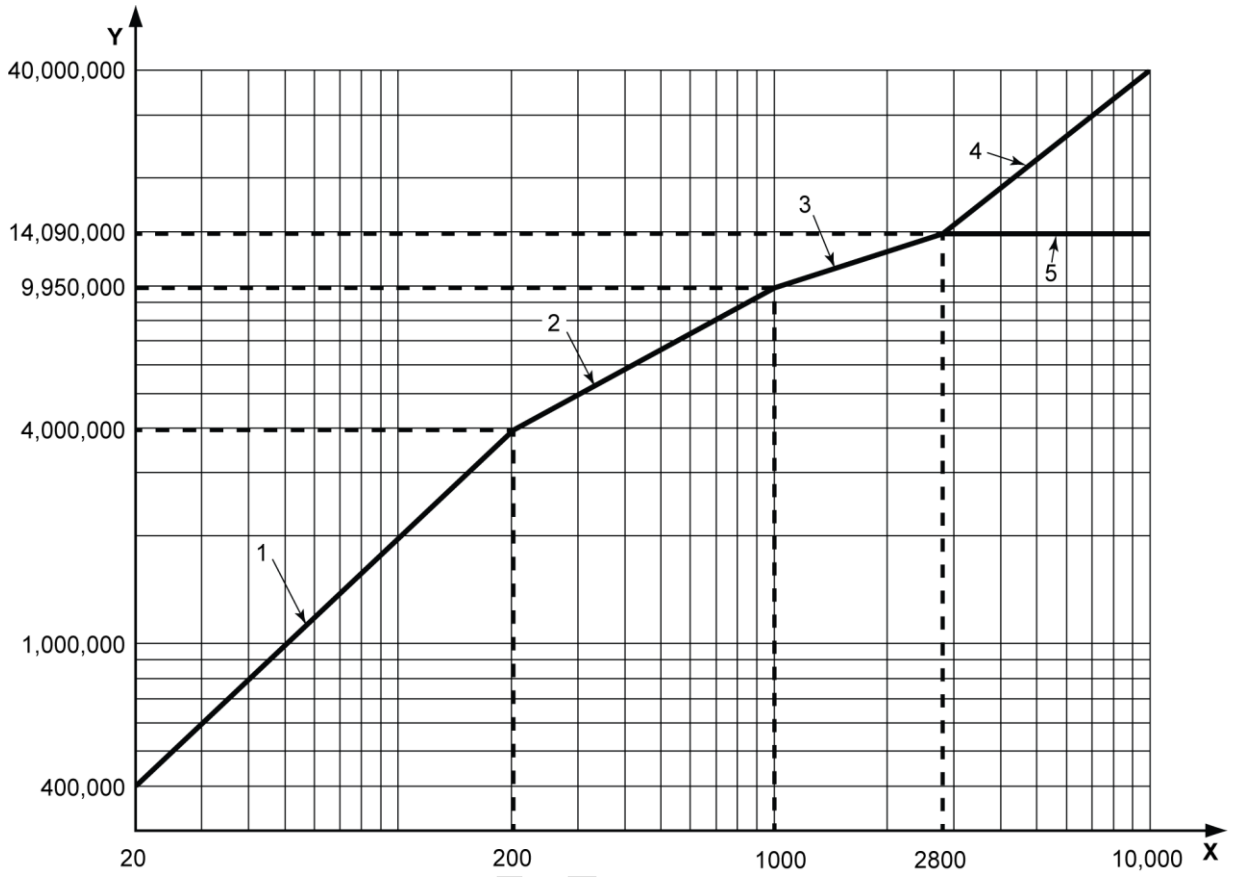

Key

X wetted surface area, expressed in square feet

Y heat absorption, expressed in British thermal units per hour

1 straight-line segment 1: (in USC units) $Q_1 = 20{,}000 A_{TWS}$

2 straight-line segment 2: (in USC units) $Q_2 = 199{,}300\ (A_{TWS}{}^{0.566})$

3 straight-line segment 3: (in USC units) $Q_3 = 963{,}400\ (A_{TWS}{}^{0.338})$

4 straight-line segment 4: (in USC units) $Q_4 = 21{,}000\ (A_{TWS}{}^{0.82})$

5 vapor equivalent of 14,090,000 Btu/h, point beyond which additional venting capacity is not effective

NOTE Above 2800 ft^2 of wetted surface area, the total heat absorption is considered to remain constant for nonrefrigerated tanks below a gauge pressure of 1 psi. For nonrefrigerated tanks above this pressure, and for all refrigerated tanks, the total heat absorption continues to increase with wetted surface area. This is the reason why the curve splits above 2800 ft^2.

Figure B.2—Curve for Determining Requirements for Emergency Venting During Fire Exposure (USC Units)

BALLOT

This document is not an API Standard; it is under consideration within an API technical committee but has not received all approvals required to become an API Standard. It shall not be reproduced or circulated or quoted, in whole or in part, outside of API committee activities except with the approval of the Chairman of the committee having jurisdiction and staff of the API Standards Dept. Copyright API. All rights reserved.

Annex C
(informative)

Types and Operating Characteristics of Venting Devices

C.1 Introduction

Two basic types of pressure or vacuum vents, direct-acting vent valves and pilot-operated vent valves, are available to provide overpressure or vacuum protection for low-pressure storage tanks. Direct-acting vent valves can be weight-loaded or spring-loaded. These venting devices not only provide overpressure protection but also conserve product. Direct-acting vent valves are sometimes referred to as conservation vents.

Another type of venting device, an open vent, is available to provide overpressure or vacuum protection for storage tanks designed to operate at atmospheric pressure. An open vent is always open. It allows a tank designed to operate at atmospheric pressure to inbreathe and out-breathe at any pressure differential. An open vent is usually provided with some type of weather hood or shape that prevents rain or snow from entering the tank (see Figure C.1).

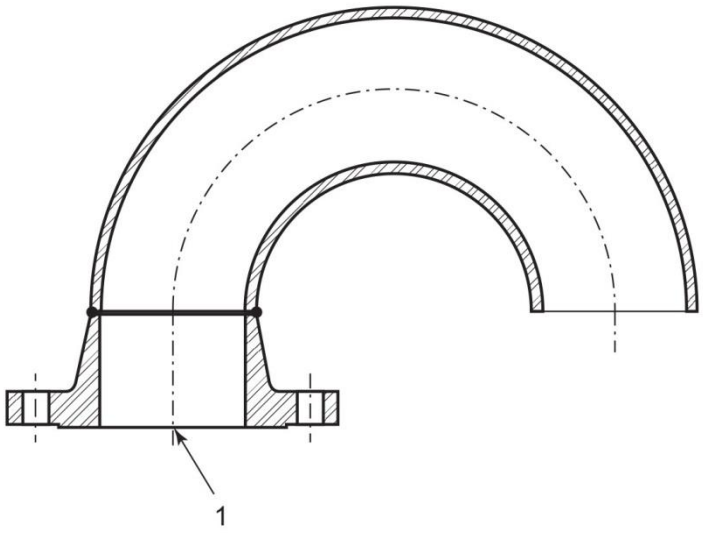

Key

1 tank connection

Figure C.1—Open Vent

C.2 Direct-acting Vent Valves

C.2.1 Description

Direct-acting vent valves are available to provide pressure relief, vacuum relief, or a combination of pressure and vacuum relief. Combination vent valves may be of a side-by-side configuration (see Figure C.2). Side-by-side vent valves or pressure-relief vent valves are available with flanged outlets for pressure discharge when it is necessary to pipe the pressure-relief vapors away.

Larger, direct-acting vent valves are available to provide emergency relief and can provide access to a tank's interior for inspection or maintenance. They are typically available in sizes from 400 mm (16 in.) to 600 mm (24 in.) (see Figure C.3). Figure C.4 shows other types and configurations of direct-acting vent valves.

This document is not an API Standard; it is under consideration within an API technical committee but has not received all approvals required to become an API Standard. It shall not be reproduced or circulated or quoted, in whole or in part, outside of API committee activities except with the approval of the Chairman of the committee having jurisdiction and staff of the API Standards Dept. Copyright API. All rights reserved.

C.2.2 Principle of Operation

The principle of operation of a direct-acting vent valve is based on the weight of the pallet or the spring force acting on the pallet to keep the device closed. When tank pressure or vacuum acting on the seat sealing area equals the opposing force acting on the pallet, the venting device is on the threshold of opening. Any further increase in pressure or vacuum causes the pallet to begin to lift off the seat.

Some weight loaded PV valves require significant overpressure (or vacuum) to achieve the required flows and as a result may need to be set well below the design pressure/design vacuum of the tank. The user should consult the PV valve manufacturer to verify that the PV valve will have sufficient capacity to keep tank pressure/vacuum within limits specified by the tank's design code of construction. Where the overpressure/vacuum required for the PV valve to satisfy the tank flow requirements exceeds the pressure/vacuum limits of the storage tank, a larger venting device or multiple venting devices can be used at reduced lift and provide sufficient capacity. Fewer large PV valves instead of more small PV valves are usually preferred to minimize the number of tank penetrations.

C.2.3 Seat Tightness and Blowdown

A soft, nonstick material is typically used on the sealing surface of the pallet. This material can prevent the pallet from sticking to the nozzle.

Seat leakage typically starts at 75 % to 90 % of set pressure and varies strongly for the different technologies. The closer a tank gets to the set pressure, the more leakage occurs.

Seat leakage can cause vent valve seats to stick closed if the vapors from the storage tank product polymerize when exposed to atmospheric air or the vapors auto-refrigerate, condense, and freeze atmospheric moisture. Purging the seat area with an inert gas, such as nitrogen, or using a heat-traced or steam-jacketed device can reduce sticking. Some manufacturers provide special technology for polymerizing services, in the knowledge that relief-device heating can increase the risk of polymerization of some monomers (e.g. styrene). Also, special technology (e.g. fermenter) that operates without support energy is available for applications where freezing of atmospheric moisture can be a problem.

Seat leakage can be caused by uneven bolt torque on flanged connections, particularly in large-diameter devices such as weight-loaded emergency venting devices. To prevent this, it is recommended that a minimum flange thickness should be specified for API flanges.

Blowdown is the difference between opening and closing (reseating) pressure of a relief device. This pressure difference is expressed as a pressure or as a percentage of the set pressure. The amount of blowdown varies with the relief-device design. PV valve blowdown should be evaluated if inert-gas blanketing systems are installed in combination with pressure/vacuum relief valves.

When selecting vent devices for areas with strict fugitive emissions regulations, the maximum leakage requirements during periods of normal tank operation shall be taken into consideration.

C.2.4 Venting Device Sizes and Set Pressures

Direct-acting vent valves are typically available in sizes from 50 mm (2 in.) to 300 mm (12 in.) (see Figure C.4a – f). Stacked configurations are available in small sizes from 50 mm (2 in.) to 150 mm (6 in.) (see Figure C.4g). Stacked valves are typically used on smaller tanks with smaller venting requirements.

Typical set pressure ranges for weight-loaded vent valves are up to 6.9 kPa (ga) (16 oz/in.^{2}) and up to a vacuum of −4.3 kPa (ga) (−10 oz/in.^{2}). Spring-loaded vent valves should be used for pressure or vacuum settings that exceed these values because the supporting structure and space for the added weights is not available.

BALLOT DRAFT

This document is not an API Standard; it is under consideration within an API technical committee but has not received all approvals required to become an API Standard. It shall not be reproduced or circulated or quoted, in whole or in part, outside of API committee activities except with the approval of the Chairman of the committee having jurisdiction and staff of the API Standards Dept. Copyright API. All rights reserved.

Verification of the set pressure of a venting device after it has been installed on a storage tank can be accomplished by increasing the tank pressure or vacuum. To change the set pressure, weights shall be added or removed from the pallet, or a new pallet shall be used, or the spring shall be adjusted (if a spring-loaded vent valve is being used).

C.3 Pilot-operated Vent Valves

C.3.1 Description

Pilot-operated vent valves are available to provide pressure relief, vacuum relief, or a combination of pressure and vacuum relief. Some vent valves can be equipped with flanged outlets if it is necessary to pipe pressure-relief vapors away. Unlike side-by-side direct-acting vent valves, pilot-operated vent valves relieve pressure or vacuum through the same opening to atmosphere (see Figure C.6).

C.3.2 Principle of Operation

A pilot-operated vent valve for pressure relief uses tank pressure, not weights or a spring, to keep the vent valve seat closed. The main seat is held closed by tank pressure acting on a large-area diaphragm. This tank pressure covers an area greater than the seat sealing area, so the net pressure force is always in a direction to keep the seat closed. The volume above the diaphragm is called the dome. If the diaphragm fails, the dome pressure decreases and the vent valve opens.

The pilot is a small control valve that continuously senses tank pressure. When the tank pressure increases to set pressure, the pilot actuates to reduce the pressure in the dome volume, the force holding the seat closed is reduced and the seat lifts to permit tank pressure to discharge through the vent valve. When the tank pressure decreases, the pilot closes, the dome volume repressurizes, and the main seat closes. Two types of pilot actions are available: modulating and snap action. For modulating action, the main vent valve opens gradually with increasing pressure and achieves rated relieving capacity at relieving pressure. Modulating valves reseat very close to the set pressure. For snap action, the main valve opens rapidly at set pressure and achieves rated relieving capacity at relieving pressure.

A pilot-operated vent valve achieves full lift at or below 10 % overpressure (see Figure C.5). This lift characteristic permits overpressure protection to be accomplished with smaller or fewer venting devices. In addition, relative to direct-acting vent valves, pilot-operated vent valves can have a tank-operating pressure closer to the set pressure.

A pilot-operated vent valve for vacuum relief uses atmospheric pressure to keep the seat closed. The force holding the seat closed is equal to the seat sealing area times the pressure differential across the seat. This pressure differential is equal to atmospheric pressure plus the tank vacuum. When the tank vacuum equals the pilot set, the pilot opens to apply tank vacuum to the large dome volume above the diaphragm. Atmospheric pressure acting on the downstream side of the diaphragm forces the diaphragm and seat up. Little or no increase in tank vacuum beyond the vent valve setting is required to obtain full lift of the seat. When the tank vacuum decreases, the pilot closes and atmospheric pressure enters the dome to close the main seat.

If the diaphragm fails, atmospheric air enters the dome and prevents the tank vacuum from creating a force differential to lift the seat. Double-diaphragm vent valves are available to prevent such a failure (see Figure C.6): one diaphragm is for pressure actuation and one is for vacuum actuation. Each diaphragm is isolated and protected from the flow stream and fully supported to minimize stress. The vacuum diaphragm moves only to provide vacuum relief to extend its service life.

BALLOT DRAFT

This document is not an API Standard; it is under consideration within an API technical committee but has not received all approvals required to become an API Standard. It shall not be reproduced or circulated or quoted, in whole or in part, outside of API committee activities except with the approval of the Chairman of the committee having jurisdiction and staff of the API Standards Dept. Copyright API. All rights reserved.

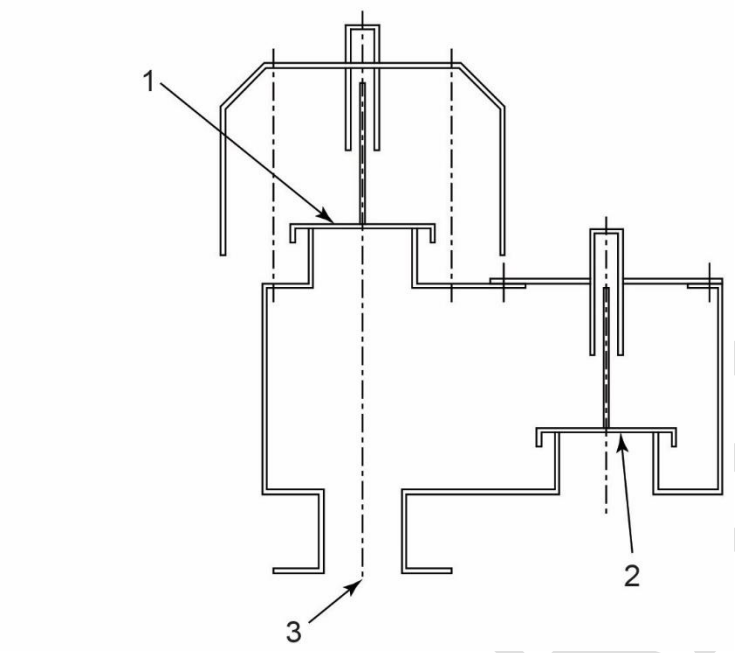

Key

1 pressure pallet
2 vacuum pallet
3 tank connection

Figure C.2—Side-by-side Pressure/Vacuum Vent

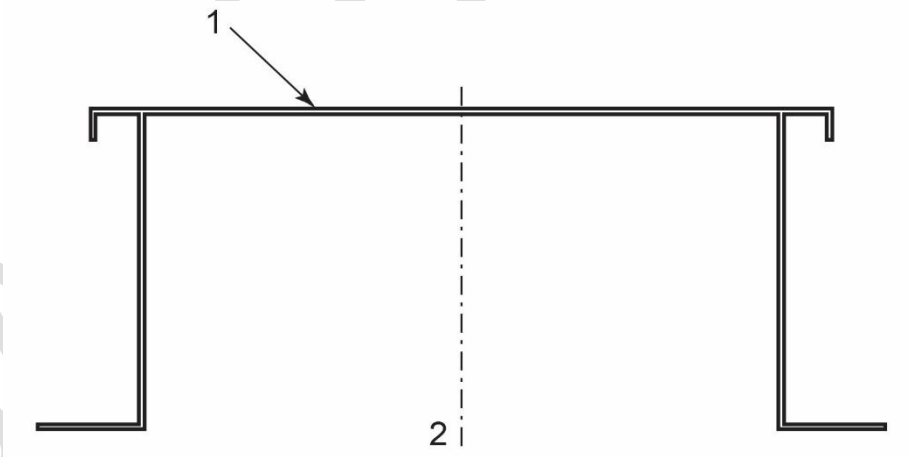

Key

1 pressure pallet
2 tank connection

Figure C.3—Large, Weight-loaded Emergency Vent

BALLOT DRAFT

This document is not an API Standard; it is under consideration within an API technical committee but has not received all approvals required to become an API Standard. It shall not be reproduced or circulated or quoted, in whole or in part, outside of API committee activities except with the approval of the Chairman of the committee having jurisdiction and staff of the API Standards Dept. Copyright API. All rights reserved.

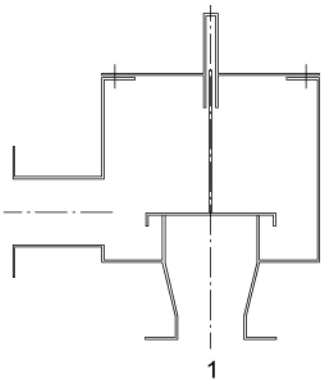

a) Weighted-pallet pressure vent flanged outlet

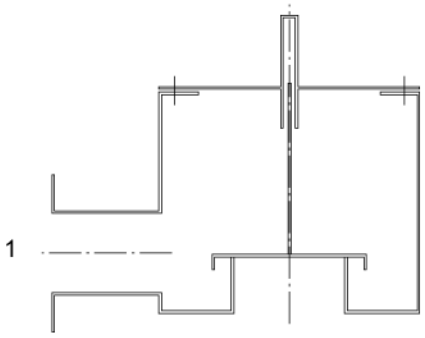

b) Weighted-pallet vacuum vent

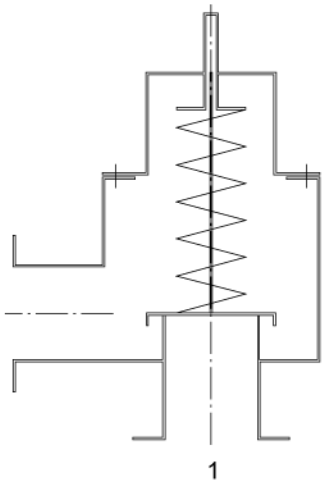

c) Spring-loaded pressure vent flanged outlet

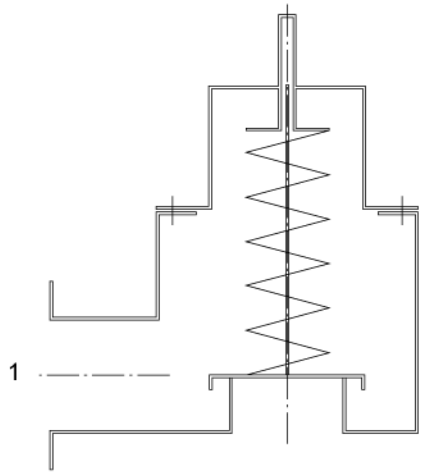

d) Spring-loaded vacuum vent

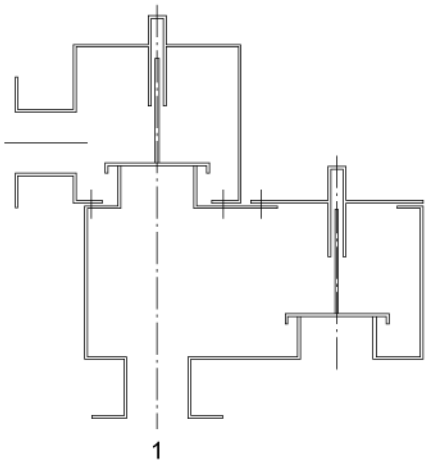

e) Side-by-side, weighted pressure/vacuum vent flanged pressure outlet

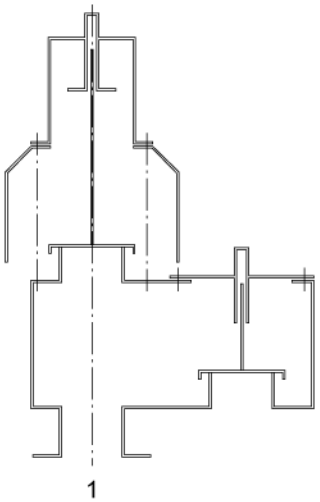

f) Side-by-side, spring-loaded pressure weight-loaded vacuum vent

Key
1 tank connection

Key

This document is not an API Standard; it is under consideration within an API technical committee but has not received all approvals required to become an API Standard. It shall not be reproduced or circulated or quoted, in whole or in part, outside of API committee activities except with the approval of the Chairman of the committee having jurisdiction and staff of the API Standards Dept. Copyright API. All rights reserved.

1 tank connection

Figure C.4—Direct-acting Vents

EDITORS NOTE: THE FOLLOWING NEEDS TO BE ADDED TO FIGURE C.4 AS G) PRIOR TO PUBLICATION

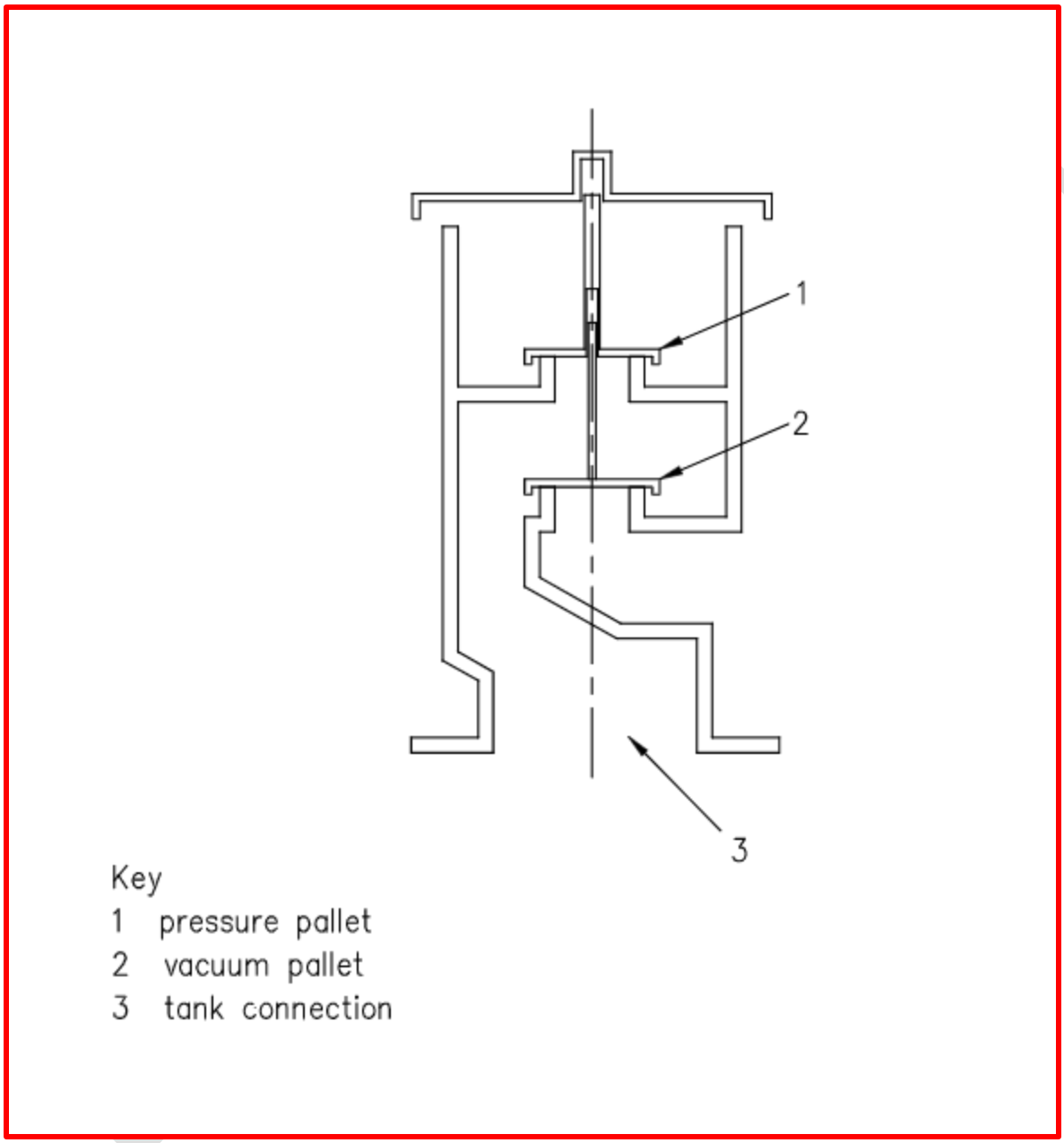

This document is not an API Standard; it is under consideration within an API technical committee but has not received all approvals required to become an API Standard. It shall not be reproduced or circulated or quoted, in whole or in part, outside of API committee activities except with the approval of the Chairman of the committee having jurisdiction and staff of the API Standards Dept. Copyright API. All rights reserved.

C.3.3 Seat Tightness and Blowdown

All low-pressure pilot vent valves are soft-seated for premium tightness. Unlike in a direct-acting vent valve, the force holding the seat closed in a pilot vent valve increases with increasing pressure. This force is maximum just before the vent valve opens, so leakage does not occur when tank pressure increases or when tank pressure is kept near the set point of the venting device. The force available to open the seat at the set pressure is also maximum, since the force holding the seat closed is removed or reduced when the set pressure is reached. The opening force available is essentially equal to the seat area times the tank pressure.

Blowdown with pilot-operated vent valves is less than with direct-acting vent valves. Blowdown for snap action pilots is typically less than 7 % of the set pressure. Blowdown for modulating pilot valves is typically much less.

C.3.4 Venting-device Sizes and Set Pressures

Low-pressure, pilot-operated vent valves are typically available in sizes from 50 mm (2 in.) to 600 mm (24 in.). Available set pressures range from 103.4 kPa (ga) (15 psig) to −101.3 kPa (ga) (−14.7 psig) vacuum. The minimum opening pressure is typically a 0.5 kPa (ga) (2 in. H_2O) or −0.5 kPa (ga) (−2 in. H_2O) vacuum.

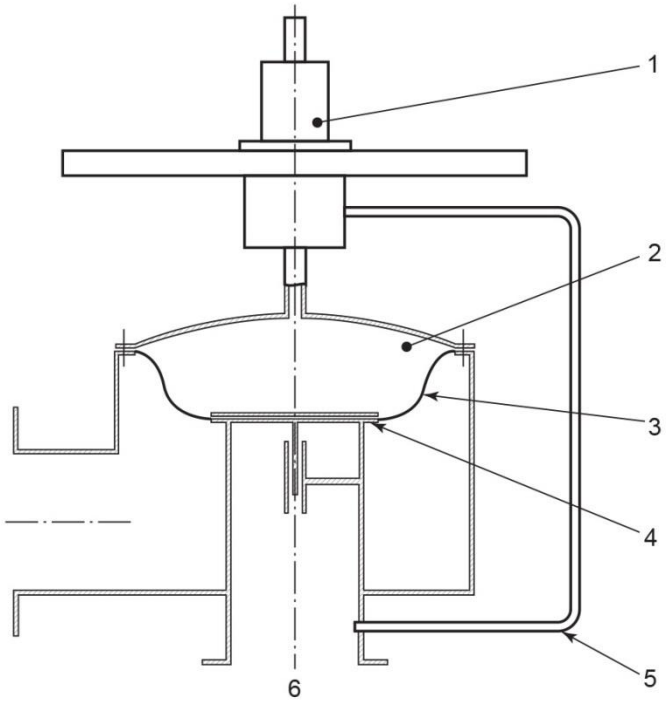

Key

1 pilot
2 dome
3 diaphragm
4 seat
5 pressure probe
6 tank connection

Figure C.5—Pilot-operated Pressure Vent (Single Diaphragm)

This document is not an API Standard; it is under consideration within an API technical committee but has not received all approvals required to become an API Standard. It shall not be reproduced or circulated or quoted, in whole or in part, outside of API committee activities except with the approval of the Chairman of the committee having jurisdiction and staff of the API Standards Dept. Copyright API. All rights reserved.

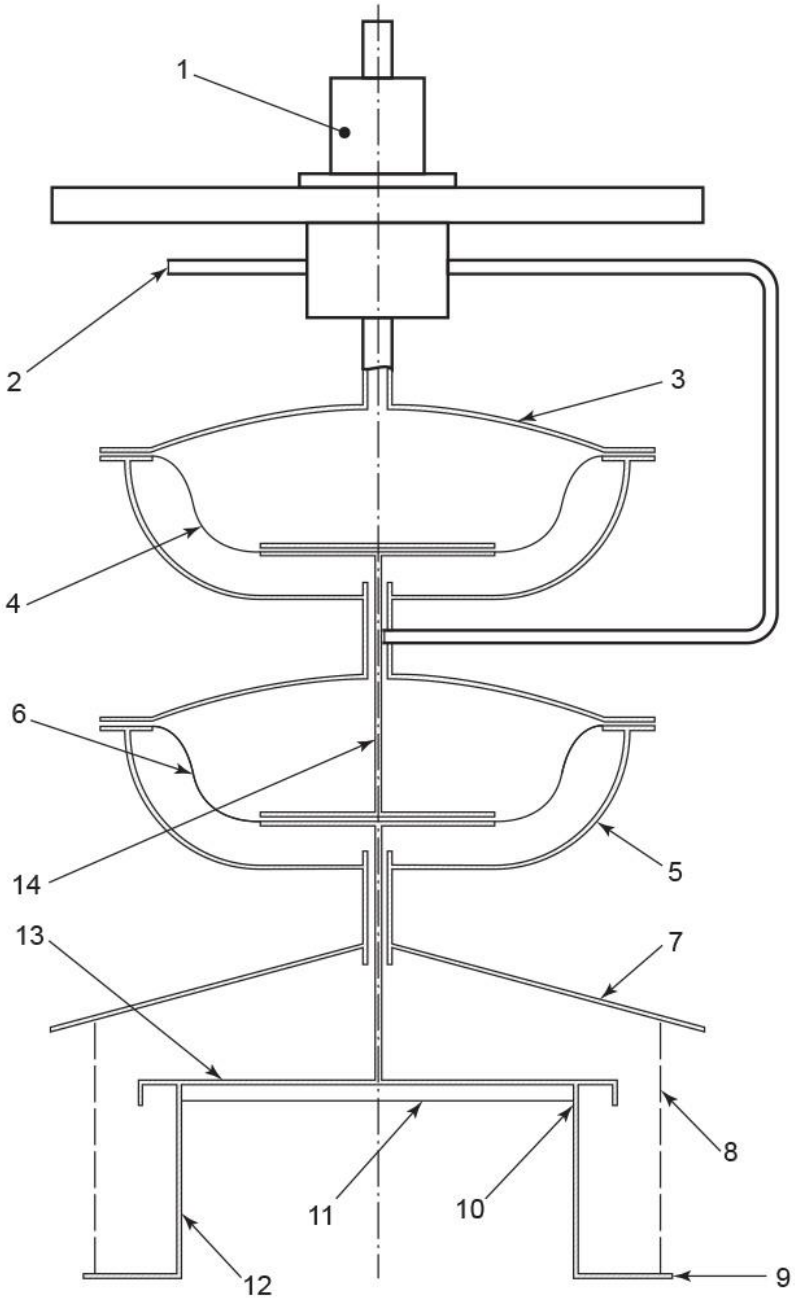

Key

1	pilot	8	screen
2	pilot inlet	9	base flange
3	vacuum actuator assembly	10	film seat
4	vacuum diaphragm	11	film protector plate
5	pressure actuator assembly	12	nozzle
6	pressure diaphragm	13	seat plate
7	shield	14	vacuum rod

Figure C.6—Pilot-operated Pressure/Vacuum (Double Diaphragm)

This document is not an API Standard; it is under consideration within an API technical committee but has not received all approvals required to become an API Standard. It shall not be reproduced or circulated or quoted, in whole or in part, outside of API committee activities except with the approval of the Chairman of the committee having jurisdiction and staff of the API Standards Dept. Copyright API. All rights reserved.

C.3.5 Optional Features

Several options are available with a pilot-operated vent valve. For verifying set pressure, a field-test connection can be supplied that permits checking the set pressure with the vent valve installed and pressurized.

A valve to operate the pilot-operated vent valve as a blowdown device can be supplied if depressurizing the storage tank is required. This valve can be operated manually at the vent valve or remotely from a control room.

For installations where inlet piping pressure losses can cause the vent valve to rapid-cycle, the pilot can be equipped to sense tank pressure at a location upstream of the inlet pipe. This option, known as remote sense, prevents the vent valve from rapid-cycling; however, the relieving capacity is reduced because the capacity is dependent upon the pressure at the vent valve inlet.

When particulates in the tank vapors can be a problem, an external, fine-element filter can be supplied for the pilot-pressure sense line. When polymerization of tank vapors in the pilot can be a problem, an inert-gas purge at the pilot-pressure sense line can be supplied to prevent the tank vapors from entering the pilot.

A pilot-operated vent valve can be equipped with a pilot lift lever and a position indicator. A lift lever permits manual operation of the pilot to make sure it is free to operate. Actuation of this lever always opens the main valve if the tank is pressurized. A position indicator is a differential-pressure switch that can be used to signal a control room whether the vent valve is open or closed.

BALLOT DRAFT

This document is not an API Standard; it is under consideration within an API technical committee but has not received all approvals required to become an API Standard. It shall not be reproduced or circulated or quoted, in whole or in part, outside of API committee activities except with the approval of the Chairman of the committee having jurisdiction and staff of the API Standards Dept. Copyright API. All rights reserved.

Annex D
(informative)

Basis of Sizing Equations

D.1 Scope

This annex provides the basis for some of the sizing equations used in this standard.

D.2 Standard and Normal Conditions

In many of the calculations in this standard, a set of reference conditions is chosen for expressing the volumetric flow rates of an ideal gas. These are normal conditions or standard conditions, as follows.

— Normal conditions, consisting of a pressure at atmospheric pressure 101.325 kPa (14.696 psia) and a temperature of 0 °C (32 °F), are used for expressions involving SI units. At normal conditions, the molar volume of an ideal gas is 22.414 m^3/kmol.

— Standard conditions, consisting of a pressure at atmospheric pressure 101.325 kPa (14.696 psia) and a temperature of 15.56 °C (60 °F), are used for expressions involving USC units. At standard conditions, the molar volume of an ideal gas is 379.46 ft^3/lb·mol.

It is important to note that the reference temperature for normal conditions (0 °C or 32 °F) is not the same as the reference temperature for standard conditions (15.6 °C or 60 °F). The conversion between normal and standard conditions has been incorporated when reporting the results in the different unit systems. The user is cautioned that the volumetric rates reported in the different unit systems might not appear to be equivalent because of this temperature conversion.

The ratio of the absolute temperatures should be used to convert between the volumetric flows of a free gas (i.e. where the mass or molar flow rate has been converted to an equivalent volumetric flow rate) at either reference condition.

$$\frac{q_{\text{normal}}}{q_{\text{standard}}} = \left(\frac{491.67\,°\text{R}}{519.67\,°\text{R}}\right)\cdot\left(\frac{1\,\text{m}^3}{35.3147\,\text{ft}^3}\right) = 0.02679\,\frac{\text{Nm}^3}{\text{SCF}} \tag{D.1}$$

where

q_{normal} is the volumetric flow at normal conditions, expressed in normal cubic meters per hour;

q_{standard} is the volumetric flow at standard conditions, expressed in standard cubic feet per hour.

NOTE This is equivalent to the conversion between the molar volume of an ideal gas at normal and standard conditions.

$$\frac{q_{\text{normal}}}{q_{\text{standard}}} = \frac{22.414\,\text{Nm}^3/\text{kmol}}{379.46\,\text{SCF/lb}\cdot\text{mol}}\cdot\left(\frac{1\,\text{kmol}}{2.2046\,\text{lb}\cdot\text{mol}}\right) = 0.02679\,\frac{\text{Nm}^3}{\text{SCF}} \tag{D.2}$$

BALLOT DRAFT

This document is not an API Standard; it is under consideration within an API technical committee but has not received all approvals required to become an API Standard. It shall not be reproduced or circulated or quoted, in whole or in part, outside of API committee activities except with the approval of the Chairman of the committee having jurisdiction and staff of the API Standards Dept. Copyright API. All rights reserved.

Whenever relief requirements are expressed in equivalent volumetric flows of air at a set of reference conditions, the ratio of the square root of the absolute temperatures should be used to convert between the reference conditions. Refer to D.10 for more information.

$$\frac{q_{\text{normal}}}{q_{\text{standard}}} = \frac{22.414\,\text{Nm}^3/\text{kmol}}{379.46\,\text{SCF/lb}\cdot\text{mol}} \cdot \left(\frac{1\,\text{kmol}}{2.2046\,\text{lb}\cdot\text{mol}} \right) \cdot \sqrt{\frac{519.67 R_g}{491.67 R_g}} = 0.02754\,\frac{\text{Nm}^3}{\text{SCF}} \tag{D.3}$$

D.3 Theoretical Flow Rate for Coefficient of Discharge Method

D.3.1 Theoretical Basis

D.3.1.1 The theoretical flow rate presented for the coefficient of discharge method for the testing of venting devices is based on the following assumptions:

a) that the flow-limiting element in a fully opened pressure vent is the nozzle in the body of the vent between the inlet opening and the seating surface and

b) that the appropriate thermodynamic path for determining the theoretical maximum flow through the nozzle is adiabatic and reversible (i.e. isentropic), a common assumption that has been borne through various experimental evidence for well-formed nozzles.

D.3.1.2 The isentropic nozzle flow assumption provides a standard theoretical framework for the theoretical flow equation. The general energy balance for the isentropic nozzle flow of a homogeneous fluid forms the basis for the calculation of the mass flux (mass flow per unit area), G, through the nozzle, expressed in SI units of kilograms per second per square meter as given by Equation (D.4) and expressed in USC units of pounds per second per square foot as given by in Equation (D.5):

$$G^2 = \left(-2 \cdot \int_{p_i}^{p_{st}} \nu \cdot \mathrm{d}p \Big/ \nu_{th}^2 \right)_{max} \tag{D.4}$$

$$= \left[\left(\rho_{th}^2 \right) \cdot \left(-2 \cdot \int_{p_i}^{p_{st}} \frac{\mathrm{d}p}{\rho} \right) \right]_{max}$$

where

ν is the specific volume of the fluid, expressed in cubic meters per kilogram;

ρ is the mass density of the fluid, expressed in kilograms per cubic meter;

p_{st} is the stagnation pressure of the fluid, expressed in newtons per square meter;

i is the subscript that designates fluid conditions at the inlet to the nozzle;

th is the subscript that designates fluid conditions at the throat of the nozzle where the cross-sectional area is minimized;

max is the subscript that designates the maximization of this calculation, which accounts for potential choking of the fluid.

BALLOT DRAFT

This document is not an API Standard; it is under consideration within an API technical committee but has not received all approvals required to become an API Standard. It shall not be reproduced or circulated or quoted, in whole or in part, outside of API committee activities except with the approval of the Chairman of the committee having jurisdiction and staff of the API Standards Dept. Copyright API. All rights reserved.

$$G^2 = \left(\frac{-9266.1 \cdot \int_{p_i}^{p_{st}} v \cdot \mathrm{d}p}{v_{th}^2} \right)_{max} \tag{D.5}$$

$$= \left[\left(\rho_{th}^2 \right) \cdot \left(-9266.1 \cdot \int_{p_i}^{p_{st}} \frac{\mathrm{d}p}{\rho} \right) \right]_{max}$$

where

v is the specific volume of the fluid, expressed in cubic feet per pound;

ρ is the mass density of the fluid, expressed in pound per cubic foot;

p_{st} is the stagnation pressure of the fluid, expressed in pounds per square inch absolute;

i is the subscript that designates fluid conditions at the inlet to the nozzle;

th is the subscript that designates fluid conditions at the throat of the nozzle where the cross-sectional area is minimized;

max is the subscript that designates the maximization of this calculation, which accounts for potential choking of the fluid.

D.4 Isentropic Nozzle Flow for Vapors and Gases

D.4.1 For vapors and gases with a constant isentropic expansion coefficient, the expression for the specific volume-to-pressure relationship along an isentropic path is given by Equation (D.6):

$$p_{fl} \cdot v^n = p_i \cdot v_i^n \tag{D.6}$$

where

v is the specific volume of the fluid, expressed in cubic meters per kilogram (cubic feet per pound);

p_{fl} is the pressure of the fluid, expressed in pascals (pounds per square inch absolute);

n is the isentropic expansion coefficient.

D.4.2 Determining the isentropic expansion coefficient for a real gas can be complicated because it is a function of both pressure and temperature and, while in most cases it is relatively constant, it can vary throughout the expansion process. The coefficient can generally be obtained from an equation of state that describes the pressure-volume relationship along any thermodynamic path but is restricted to an isentropic expansion path. In the event that the isentropic expansion coefficient is constant, an expression for the isentropic expansion coefficient, n, in terms of thermodynamic state variables can be derived as given in Equation (D.7).

$$n = -\frac{v}{p_{fl}} \cdot \left(\frac{\partial p_{fl}}{\partial v} \right)_T \cdot \frac{C_p}{C_v} \tag{D.7}$$

where

v is the specific volume of the fluid, expressed in cubic meters per kilogram (cubic feet per pound);

BALLOT DRAFT

This document is not an API Standard; it is under consideration within an API technical committee but has not received all approvals required to become an API Standard. It shall not be reproduced or circulated or quoted, in whole or in part, outside of API committee activities except with the approval of the Chairman of the committee having jurisdiction and staff of the API Standards Dept. Copyright API. All rights reserved.

p_{fl} is the pressure of the fluid, expressed in newtons per square meter (pounds per square inch absolute);

T is the subscript that designates the partial derivative taken at constant temperature;

C_p is the specific heat capacity of the fluid at constant pressure, expressed joules per kilogram·kelvin (British thermal units per pound·degree Fahrenheit);

C_v is the specific heat capacity of the fluid at constant volume, expressed joules per kilogram·kelvin (British thermal units per pound·degree Fahrenheit).

D.4.3 These variables can be evaluated at any point along the isentropic path; however, the inlet conditions are most convenient as the relief temperature is known at this point and the specific heat capacities can be readily obtained.

D.4.4 For vapors and gases that can be considered ideal gases, i.e. that follow the ideal gas law, the expression for the constant isentropic expansion coefficient can be further reduced by deriving the expression for the partial derivative of pressure with respect to specific volume at constant temperature for the ideal gas. The isentropic expansion coefficient for an ideal gas is constant and is the ratio of the ideal-gas-specific heat capacity at constant pressure to the ideal-gas-specific heat capacity at constant volume (i.e. the ideal-gas-specific heat ratio, k), as shown in Equation (D.8).

$$k = -\frac{v}{p_{fl}} \cdot \left(-\frac{p_{fl}}{v} \right) \cdot \frac{C_p^*}{C_v^*} = \frac{C_p^*}{C_v^*} \tag{D.8}$$

where

k is the isentropic expansion coefficient for an ideal gas, also referred to as the ideal-gas-specific heat ratio;

p_{fl} is the pressure of the fluid;

v is the specific volume of the fluid;

C_p is the specific heat capacity at constant pressure;

C_v is the specific heat capacity at constant volume;

* represents the ideal gas values.

Again, this expression can be evaluated at any point along the isentropic path; however, the inlet conditions are most convenient as the relief temperature is known at this point and the specific heat capacities can be readily obtained. It is useful to note that the ideal-gas specific heat ratio is not significantly dependent on temperature (and is not dependent at all on pressure); hence, the ideal-gas-specific heat ratio at standard conditions may be a good estimate in the absence of other information.

D.4.5 For vapors and gases that follow the constant isentropic expansion expression, the isentropic nozzle flux equation [Equation (D.4)] can be solved analytically to yield the expression shown in Equation (D.9), which is applicable for subcritical or critical flow provided the correct throat pressure is chosen for either case:

$$G^2 = \left(\frac{2}{v_i \cdot p_{fl,i}^{1/n}} \right) \cdot \left(p_{fl,o}^{2/n} \right) \cdot \left(\frac{n}{n-1} \right) \cdot \left(p_{fl,i}^{(n-1)/n} - p_{fl,o}^{(n-1)/n} \right) \tag{D.9}$$

BALLOT DRAFT

This document is not an API Standard; it is under consideration within an API technical committee but has not received all approvals required to become an API Standard. It shall not be reproduced or circulated or quoted, in whole or in part, outside of API committee activities except with the approval of the Chairman of the committee having jurisdiction and staff of the API Standards Dept. Copyright API. All rights reserved.

where

n is the isentropic expansion coefficient;

ν is the specific volume of the fluid;

p_{fl} is the pressure of the fluid;

i is the subscript that designates conditions at the inlet of the nozzle;

o is the subscript that designates conditions at the throat of the nozzle, equal to the choking conditions if critical flow occurs or to the outlet conditions if subcritical flow occurs.

D.5 Theoretical Flow

D.5.1 The following algebraic rearrangements are performed on Equation (D.9) to yield the expression for the theoretical flow shown in Equations (D.17) and (D.18):

$$G^2 = \left(\frac{2}{v_i}\right)\cdot\left(\frac{n}{n-1}\right)\cdot\left(\frac{p_i^{1/n}}{p_i^{1/n}}\cdot\frac{p_o^{2/n}}{p_i^{1/n}}\right)\cdot\frac{p_i^{\frac{n-1}{n}}}{p_i^{\frac{n-1}{n}}}\cdot\left(p_i^{\frac{n-1}{n}} - p_o^{\frac{n-1}{n}}\right) \tag{D.10}$$

$$G^2 = \left(\frac{2}{v_i}\right)\cdot\left(\frac{n}{n-1}\right)\cdot\left(\frac{p_i^{1/n}}{1}\cdot\frac{p_o^{2/n}}{p_i^{2/n}}\right)\cdot\frac{p_i^{\frac{n-1}{n}}}{1}\cdot\left(1-\frac{p_o^{\frac{n-1}{n}}}{p_i^{\frac{n-1}{n}}}\right) \tag{D.11}$$

$$G^2 = \left(\frac{2}{v_i}\right)\cdot\left(\frac{n}{n-1}\right)\cdot\left[\frac{p_i^{1/n}}{1}\cdot\left(\frac{p_o}{p_i}\right)^{2/n}\right]\cdot\frac{p_i^{\frac{n-1}{n}}}{1}\cdot\left[1-\left(\frac{p_o}{p_i}\right)^{\frac{n-1}{n}}\right] \tag{D.12}$$

$$G^2 = \left(\frac{2}{v_i}\right)\cdot\left(\frac{n}{n-1}\right)\cdot\left(p_i^{1/n}\cdot p_i^{\frac{n-1}{n}}\right)\cdot\left[\left(\frac{p_o}{p_i}\right)^{2/n} - \left(\frac{p_o}{p_i}\right)^{2/n}\cdot\left(\frac{p_o}{p_i}\right)^{\frac{n-1}{n}}\right] \tag{D.13}$$

$$G^2 = \left(\frac{2\cdot p_i}{v_i}\right)\cdot\left(\frac{n}{n-1}\right)\cdot\left[\left(\frac{p_o}{p_i}\right)^{2/n} - \left(\frac{p_o}{p_i}\right)^{\frac{n+1}{n}}\right] \tag{D.14}$$

D.5.2 As the temperature and compressibility factor for vapors and gases can be more readily available than the specific volume, the real gas law, as shown in Equation (D.15), may be used to substitute these variables for the specific volume, as shown in Equation (D.16).

$$v_i = \frac{Z_i \cdot R_g \cdot T_i}{p_i \cdot M} \tag{D.15}$$

where

BALLOT DRAFT

This document is not an API Standard; it is under consideration within an API technical committee but has not received all approvals required to become an API Standard. It shall not be reproduced or circulated or quoted, in whole or in part, outside of API committee activities except with the approval of the Chairman of the committee having jurisdiction and staff of the API Standards Dept. Copyright API. All rights reserved.

p_i is the pressure of the fluid;

ν is the specific volume of the fluid;

Z_i is the compressibility factor of the fluid;

R_g is the molar ideal gas constant;

T_i is the temperature of the fluid;

M is the relative molecular mass.

$$G^2 = \left(\frac{2 \cdot p_i^2 \cdot M}{Z_i \cdot R_g \cdot T_i}\right) \cdot \left(\frac{n}{n-1}\right) \cdot \left[\left(\frac{p_o}{p_i}\right)^{\frac{2}{n}} - \left(\frac{p_o}{p_i}\right)^{\frac{n+1}{n}}\right] \tag{D.16}$$

Taking the square root of both sides of Equation (D.16) gives Equation (D.17):

$$G = p_i \cdot \sqrt{\frac{2}{R_g}} \cdot \sqrt{\left(\frac{M}{Z_i \cdot T_i}\right) \cdot \left(\frac{n}{n-1}\right) \cdot \left[\left(\frac{p_o}{p_i}\right)^{\frac{2}{n}} - \left(\frac{p_o}{p_i}\right)^{\frac{n+1}{n}}\right]} \tag{D.17}$$

D.5.3 Using the definition of the mass flux as the mass flow rate per unit area, the flow through the nozzle, W_{fl}, can be expressed as a mass flow rate, as given in Equation (D.18):

$$W_{fl} = A_{eff} \cdot p_i \cdot \sqrt{\frac{2}{R_g}} \cdot \sqrt{\left(\frac{M}{Z_i \cdot T_i}\right) \cdot \left(\frac{n}{n-1}\right) \cdot \left[\left(\frac{p_o}{p_i}\right)^{\frac{2}{n}} - \left(\frac{p_o}{p_i}\right)^{\frac{n+1}{n}}\right]} \tag{D.18}$$

where A_{eff} is the required effective discharge area.

D.5.4 Using the relative molecular mass of the fluid, the mass flow rate can be converted to a molar flow rate, $\dot{N}$, as given by Equations (D.19) to (D.21):

$$\dot{N} \cdot M = A_{eff} \cdot p_i \cdot \sqrt{\frac{2}{R_g}} \cdot \sqrt{\left(\frac{M}{Z_i \cdot T_i}\right) \cdot \left(\frac{n}{n-1}\right) \cdot \left[\left(\frac{p_o}{p_i}\right)^{\frac{2}{n}} - \left(\frac{p_o}{p_i}\right)^{\frac{n+1}{n}}\right]} \tag{D.19}$$

$$\dot{N} = A_{eff} \cdot p_i \cdot \sqrt{\frac{2}{R_g}} \cdot \sqrt{\left(\frac{M}{M^2 \cdot Z_i \cdot T_i}\right) \cdot \left(\frac{n}{n-1}\right) \cdot \left[\left(\frac{p_o}{p_i}\right)^{\frac{2}{n}} - \left(\frac{p_o}{p_i}\right)^{\frac{n+1}{n}}\right]} \tag{D.20}$$

BALLOT DRAFT

This document is not an API Standard; it is under consideration within an API technical committee but has not received all approvals required to become an API Standard. It shall not be reproduced or circulated or quoted, in whole or in part, outside of API committee activities except with the approval of the Chairman of the committee having jurisdiction and staff of the API Standards Dept. Copyright API. All rights reserved.

$$\dot{N} = A_{\text{eff}} \cdot p_{\text{i}} \cdot \sqrt{\frac{2}{R_{\text{g}}}} \cdot \sqrt{\left(\frac{1}{M \cdot Z_{\text{i}} \cdot T_{\text{i}}}\right) \cdot \left(\frac{n}{n-1}\right) \cdot \left[\left(\frac{p_{\text{o}}}{p_{\text{i}}}\right)^{\frac{2}{n}} - \left(\frac{p_{\text{o}}}{p_{\text{i}}}\right)^{\frac{n+1}{n}}\right]} \tag{D.21}$$

D.5.5 The molar flow rate can then be expressed in terms of volumetric flow at a specific reference condition.

$$q = x \cdot A_{\text{eff}} \cdot p_{\text{i}} \cdot \sqrt{\frac{2}{R_{\text{g}}}} \cdot \sqrt{\left(\frac{1}{M \cdot Z_{\text{i}} \cdot T_{\text{i}}}\right) \cdot \left(\frac{n}{n-1}\right) \cdot \left[\left(\frac{p_{\text{o}}}{p_{\text{i}}}\right)^{\frac{2}{n}} - \left(\frac{p_{\text{o}}}{p_{\text{i}}}\right)^{\frac{n+1}{n}}\right]} \tag{D.22}$$

where

q is the volumetric flow rate at standard or normal conditions;

x is the conversion from moles to standard or normal volume.

D.5.6 This equation can be expressed as Equation (D.23) for cases where the isentropic expansion coefficient, n, is estimated by means of the ideal-gas-specific heat ratio, k.

$$q = x \cdot \sqrt{\frac{2}{R_{\text{g}}}} \cdot p_{\text{i}} \cdot A_{\text{eff}} \cdot \sqrt{\left(\frac{1}{M \cdot Z_{\text{i}} \cdot T_{\text{i}}}\right) \cdot \left(\frac{k}{k-1}\right) \cdot \left[\left(\frac{p_{\text{o}}}{p_{\text{i}}}\right)^{\frac{2}{k}} - \left(\frac{p_{\text{o}}}{p_{\text{i}}}\right)^{\frac{k+1}{k}}\right]} \tag{D.23}$$

D.6 Derived Expressions for SI Units

For SI units, the following values and/or units are used, where “normal” conditions refer to 0 °C and 101.325 kPa:

$$x = 22.414 \frac{\text{Nm}^3}{\text{kmol}}$$

$$R_{\text{g}} = 8314.4 \frac{\text{Pa} \cdot \text{m}^3}{\text{kmol} \cdot \text{K}}$$

$$q = 22.414 \frac{\text{Nm}^3}{\text{kmol}} \cdot \sqrt{\frac{2}{8314.4 \frac{\text{Pa} \cdot \text{m}^3}{\text{kmol} \cdot \text{K}}}} \cdot p_{\text{i}} \cdot A`_{\text{eff}} \cdot \sqrt{\left(\frac{1}{M \cdot Z_{\text{i}} \cdot T_{\text{i}}}\right) \cdot \left(\frac{k}{k-1}\right) \cdot \left(\left(\frac{p_{\text{o}}}{p_{\text{i}}}\right)^{2/k} - \left(\frac{p_{\text{o}}}{p_{\text{i}}}\right)^{\frac{k+1}{k}}\right)} \tag{D.24}$$

$$q = 0.34763 \cdot p_{\text{i}}' \cdot \frac{1\,000 \text{ Pa}}{1 \text{ kPa}} \cdot A_{\text{eff}}' \cdot \frac{1 \text{ m}^2}{10,000 \text{ cm}^2} \cdot \sqrt{\left(\frac{1}{M \cdot Z_{\text{i}} \cdot T_{\text{i}}}\right) \cdot \left(\frac{k}{k-1}\right) \cdot \left[\left(\frac{p_{\text{o}}}{p_{\text{i}}}\right)^{\frac{2}{k}} - \left(\frac{p_{\text{o}}}{p_{\text{i}}}\right)^{\frac{k+1}{k}}\right]} \tag{D.25}$$

BALLOT DRAFT

This document is not an API Standard; it is under consideration within an API technical committee but has not received all approvals required to become an API Standard. It shall not be reproduced or circulated or quoted, in whole or in part, outside of API committee activities except with the approval of the Chairman of the committee having jurisdiction and staff of the API Standards Dept. Copyright API. All rights reserved.

$$q = \frac{3600\ \text{s}}{1\ \text{h}} \cdot 0.034763 \cdot p_{\text{i}}' \cdot A' \cdot \sqrt{\left(\frac{1}{M \cdot Z_{\text{i}} \cdot T_{\text{i}}}\right) \cdot \left(\frac{k}{k-1}\right) \cdot \left[\left(\frac{p_{\text{o}}}{p_{\text{i}}}\right)^{\frac{2}{k}} - \left(\frac{p_{\text{o}}}{p_{\text{i}}}\right)^{\frac{k+1}{k}}\right]} \tag{D.26}$$

$$q = 125.15 \cdot p_{\text{i}}' \cdot A_{\text{eff}}' \cdot \sqrt{\left(\frac{1}{M \cdot Z_{\text{i}} \cdot T_{\text{i}}}\right) \cdot \left(\frac{k}{k-1}\right) \cdot \left[\left(\frac{p_{\text{o}}}{p_{\text{i}}}\right)^{\frac{2}{k}} - \left(\frac{p_{\text{o}}}{p_{\text{i}}}\right)^{\frac{k+1}{k}}\right]} \tag{D.27}$$

where

q is the equivalent volumetric flow rate at normal conditions, expressed in normal cubic meters per hour;

p is the pressure, expressed in kilopascals;

T is the temperature, expressed in kelvin;

A_{eff} is the required effective discharge area, expressed in square centimeters;

' is the superscript used to denote the use of the units of measure as indicated for the pressure and area above (the original derivation having used pascals for pressure and square meters for area, respectively).

D.7 Derived Expressions for USC Units

For USC units, the following values and/or units are used, where “standard” conditions refer to 60 °F and 14.696 psia:

$$x = 379.46\ \frac{\text{SCF}}{\text{lb} \cdot \text{mol}}$$

$$R_{\text{g}} = 1545.0\ \frac{\text{lbf}/\text{ft}^2 \cdot \text{ft}^3}{(\text{lb} \cdot \text{mol}) \cdot \text{R}}$$

$$g_{\text{c}} = 32.174\ \frac{\text{ft}}{\text{s}^2} \cdot \frac{\text{lbm}}{\text{lbf}}$$

where g_{c} is the gravitational constant.

$$q = 379.46\ \frac{\text{SCF}}{\text{lb} \cdot \text{mol}} \cdot \sqrt{\frac{2 \cdot 32.174\ \frac{\text{ft}}{\text{s}^2} \cdot \frac{\text{lbm}}{\text{lbf}}}{1545.0\ \frac{\text{ft} \cdot \text{lbf}}{(\text{lb} \cdot \text{mol}) \cdot \text{R}}}} \cdot p_{\text{i}} \cdot A_{\text{eff}} \cdot \sqrt{\left(\frac{1}{M \cdot Z_{\text{i}} \cdot T_{\text{i}}}\right) \cdot \left(\frac{k}{k-1}\right) \cdot \left[\left(\frac{p_{\text{o}}}{p_{\text{i}}}\right)^{\frac{2}{k}} - \left(\frac{p_{\text{o}}}{p_{\text{i}}}\right)^{\frac{k+1}{k}}\right]} \tag{D.28}$$

$$q = \frac{3600\ \text{s}}{1\ \text{h}} \cdot 77.4407 \cdot p_{\text{i}} \cdot A_{\text{eff}} \cdot \sqrt{\left(\frac{1}{M \cdot Z_{\text{i}} \cdot T_{\text{i}}}\right) \cdot \left(\frac{k}{k-1}\right) \cdot \left[\left(\frac{p_{\text{o}}}{p_{\text{i}}}\right)^{\frac{2}{k}} - \left(\frac{p_{\text{o}}}{p_{\text{i}}}\right)^{\frac{k+1}{k}}\right]} \tag{D.29}$$

BALLOT DRAFT

This document is not an API Standard; it is under consideration within an API technical committee but has not received all approvals required to become an API Standard. It shall not be reproduced or circulated or quoted, in whole or in part, outside of API committee activities except with the approval of the Chairman of the committee having jurisdiction and staff of the API Standards Dept. Copyright API. All rights reserved.

$$q = 278,790 \cdot p_{\mathrm{i}} \cdot A_{\mathrm{eff}} \cdot \sqrt{\left(\frac{1}{M \cdot Z_{\mathrm{i}} \cdot T_{\mathrm{i}}}\right) \cdot \left(\frac{k}{k-1}\right) \cdot \left[\left(\frac{p_{\mathrm{o}}}{p_{\mathrm{i}}}\right)^{\frac{2}{k}} - \left(\frac{p_{\mathrm{o}}}{p_{\mathrm{i}}}\right)^{\frac{k+1}{k}}\right]} \qquad \text{(D.30)}$$

where

q is the equivalent volumetric flow rate at standard conditions, expressed in standard cubic feet per hour;

p is the absolute pressure, expressed in pounds force per square inch;

T is the temperature, expressed in degrees Rankine;

A_{eff} is the required effective discharge area, expressed in square inches.

D.8 Conversion Between Normal and Standard Reference Conditions

The sizing equations in D.3 are expressed in the equivalent volumetric flow of free air; therefore, the temperature correction factor as indicated in D.10 can be used to convert between normal and standard reference conditions.

D.9 Expressing Relief Requirements in Terms of Equivalent Air Flow

D.9.1 General

D.9.1.1 Capacities for relief devices are expressed as air at either standard or normal conditions. In order to provide reasonable accuracy in the sizing of relief devices for storage tanks it may be necessary to adjust the calculated relief requirements into equivalent air flow. This section describes the basis for doing so.

For nonrefrigerated storage tanks, the guidance in this standard is to make this adjustment for tank out-breathing if the tank is operated above 49 °C (120 °F). The latter is an implicit criterion based on the scope of this standard. Tanks operating at pressures and temperatures less than this will likely have a vapor space composition comparable to air and the effects of temperature will be small (less than 10 %). At higher temperatures, the effect could be more significant, Adjustments may be necessary for inbreathing if the inbreathing medium is significantly different than air.

Table D.1 gives examples of the calculated units of flow for various scenarios and methods and provides guidance for when the calculated flows need to be converted to normal/standard conditions.

To convert actual flows to normal or standard use Equation (D.35). If the fluid properties are close to air, use Equation (D.37).

Derivation of these equations is discussed below.

Scenario	Calculated Units of Flow in Section 3.3	Calculated Units of Flow in Annex A	Comments
Out-breathing			

BALLOT DRAFT

This document is not an API Standard; it is under consideration within an API technical committee but has not received all approvals required to become an API Standard. It shall not be reproduced or circulated or quoted, in whole or in part, outside of API committee activities except with the approval of the Chairman of the committee having jurisdiction and staff of the API Standards Dept. Copyright API. All rights reserved.

Pump-in	Actual vapor flow	Normal or standard flow of air	When applying Section 3.3, assume calculated values are same as standard or normal flow of air unless tank is > 49 °C (120 °F). Air can be assumed since vapor space will be mostly air. Annex A is not applicable if tank is > 49 °C (120 °F).
Thermal	Normal or standard flow of air	Normal or standard flow of air	
Inbreathing			
Pump-out	Actual vapor flow	Normal or standard flow of air	When applying Section 3.3, assume calculated values are same as standard or normal flow of air unless tank is using a fluid that has a molecular weight substantially different than air to break vacuum.
Thermal	Normal or standard flow of air	Normal or standard flow of air	
Fire	Normal or standard flow of air	N/A	

Table D.1—Guidance on Converting Calculated Flows to Normal/Standard Conditions

D.9.2 Derivation

D.9.2.1 An alternative to the coefficient-of-discharge method for establishing the capacity of the venting device as described in this standard is based on actual flow testing. The results of the flow testing are typically expressed in equivalent free air flow units as a function of inlet pressure; therefore, a means for converting actual relieving requirements into equivalent air flow is required to facilitate direct comparison of the relief requirements to the venting device tested capacity.

The intent is to find an equivalent volumetric flow of air at standard or normal conditions that requires the same effective discharge area as the required relief rate determined for the actual fluid conditions.

The primary assumption inherent in this approach is that the correction factors for deviations from ideal nozzle flow, such as the coefficient of discharge, are constant.

D.9.2.2 The general nozzle-flow equation as derived in Equation (D.18) is used as the starting point for the vent sizing for actual relief requirements, W_{fl}, as given in Equation (D.31):

$$W_{\mathrm{fl}} = A_{\mathrm{eff}} \cdot p_{\mathrm{i}} \cdot \sqrt{\frac{2}{R_{\mathrm{g}}}} \cdot \sqrt{\left(\frac{M}{Z_{\mathrm{i}} \cdot T_{\mathrm{i}}}\right) \cdot \left(\frac{n}{n-1}\right) \cdot \left(r^{2/n} - r^{\frac{n+1}{n}}\right)} \tag{D.31}$$

D.9.2.3 The same expression specifically for air at standard or normal temperature is shown as Equation (D.32), where the compressibility factor is 1 and the isentropic expansion coefficient is estimated by means of the ideal gas specific heat ratio, k, since air behaves ideally at standard or normal conditions:

$$W_{\mathrm{air}} = A_{\mathrm{eff}} \cdot p_{\mathrm{i}} \cdot \sqrt{\frac{2}{R_{\mathrm{g}}}} \cdot \sqrt{\left(\frac{M_{\mathrm{air}}}{T_{\mathrm{air}}}\right) \cdot \left(\frac{k}{k-1}\right) \cdot \left(r^{2/k} - r^{\frac{k+1}{k}}\right)} \tag{D.32}$$

D.9.2.4 Solving both Equations (D.31) and (D.32) for the required venting area, setting them equal to one another (since the intent is to have an equivalent relief area) and solving for the mass flow rate, W_{air}, of air yields Equation (D.33), which can be simplified to Equation (D.34):

BALLOT DRAFT

This document is not an API Standard; it is under consideration within an API technical committee but has not received all approvals required to become an API Standard. It shall not be reproduced or circulated or quoted, in whole or in part, outside of API committee activities except with the approval of the Chairman of the committee having jurisdiction and staff of the API Standards Dept. Copyright API. All rights reserved.

$$W_{air} = W_{fl} \cdot \frac{p_i \cdot \sqrt{\frac{2}{R_g}} \cdot \sqrt{\left(\frac{M_{air}}{T_{air}}\right) \cdot \left(\frac{k}{k-1}\right) \cdot \left(r^{2/k} - r^{\frac{k+1}{k}}\right)}}{p_i \cdot \sqrt{\frac{2}{R_g}} \cdot \sqrt{\left(\frac{M}{Z_i \cdot T_i}\right) \cdot \left(\frac{n}{n-1}\right) \cdot \left(r^{2/n} - r^{\frac{n+1}{n}}\right)}} \quad \text{(D.33)}$$

$$W_{air} = W_{fl} \cdot \frac{\sqrt{\left(\frac{M_{air}}{T_{air}}\right) \cdot \left(\frac{k}{k-1}\right) \cdot \left(r^{2/k} - r^{\frac{k+1}{k}}\right)}}{\sqrt{\left(\frac{M}{Z_i \cdot T_i}\right) \cdot \left(\frac{n}{n-1}\right) \cdot \left(r^{2/n} - r^{\frac{n+1}{n}}\right)}} \quad \text{(D.34)}$$

D.9.2.5 The mass flow of air can be converted to a volumetric flow, q_{air}, of air at standard or normal conditions as given by Equation (D.35):

$$q_{air} = \frac{x}{M_{air}} \cdot W_{fl} \cdot \frac{\sqrt{\left(\frac{M_{air}}{T_{air}}\right) \cdot \left(\frac{k}{k-1}\right) \cdot \left(r^{2/k} - r^{\frac{k+1}{k}}\right)}}{\sqrt{\left(\frac{M}{Z_i \cdot T_i}\right) \cdot \left(\frac{n}{n-1}\right) \cdot \left(r^{2/n} - r^{\frac{n+1}{n}}\right)}} \quad \text{(D.35)}$$

For convenience, Figure D.1 provides the calculation for the expressions involving the isentropic expansion coefficient (n), the pressure ratio (r), and the ideal gas specific heat ratio of air (k = 1.4):

D.9.2.6 Equations (D.34) and (D.35) can be simplified further, as given in Equations (D.36) and (D.37), respectively, with the following assumptions.

a) The isentropic expansion coefficient for the actual relief fluid is equal to the ideal gas specific heat ratio for air.

b) The ratio of the throat pressure to the relieving pressure is equivalent between the two fluids. This is an acceptable assumption for cases of subcritical flow where the throat pressure is equal to atmospheric pressure, but it might not be an acceptable assumption for vents with discharge piping or for elevated relieving pressures.

c) The compressibility of the actual relief fluid is equal to 1.0.

$$W_{air} = W_{fl} \cdot \sqrt{\frac{M_{air}}{T_{air}}} \cdot \sqrt{\frac{T_i}{M}} \quad \text{(D.36)}$$

$$q_{air} = \frac{x}{M_{air}} \cdot W_{fl} \cdot \sqrt{\frac{M_{air}}{T_{air}}} \cdot \sqrt{\frac{T_i}{M}} \quad \text{(D.37)}$$

BALLOT DRAFT

This document is not an API Standard; it is under consideration within an API technical committee but has not received all approvals required to become an API Standard. It shall not be reproduced or circulated or quoted, in whole or in part, outside of API committee activities except with the approval of the Chairman of the committee having jurisdiction and staff of the API Standards Dept. Copyright API. All rights reserved.

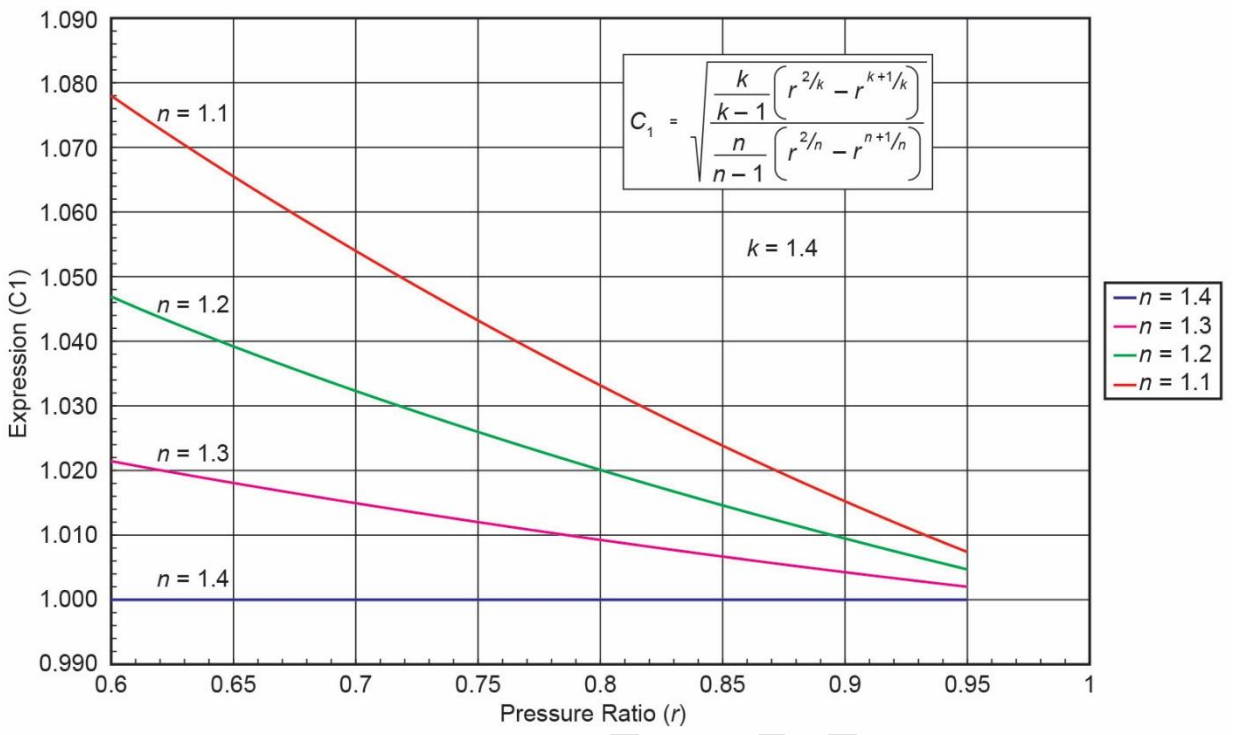

Figure D.1—Isentropic Expansion Coefficient

D.10 Conversion Between Normal and Standard Reference Conditions

The conversion between normal and standard reference conditions for the derived Equation (D.37) used to express relief requirements in terms of equivalent volumetric flow is complicated by the means used to derive the expressions and the difference in temperatures at each reference condition. As a result, using the specific equations for either reference condition is preferred. If it is necessary to convert between the reference conditions in these cases, Equation (D.38) can be used:

$$\frac{q_{\text{normal}}}{q_{\text{standard}}} = \frac{\frac{x_{\text{normal}}}{M_{\text{air}}} \cdot W_{\text{fl}} \cdot \sqrt{\frac{M_{\text{air}}}{T_{\text{normal}}}} \cdot \sqrt{\frac{T_{\text{i}}}{M}}}{\frac{x_{\text{standard}}}{M_{\text{air}}} \cdot W_{\text{fl}} \cdot \sqrt{\frac{M_{\text{air}}}{T_{\text{standard}}}} \cdot \sqrt{\frac{T_{\text{i}}}{M}}} \tag{D.38}$$

$$= \frac{x_{\text{normal}}}{x_{\text{standard}}} \cdot \sqrt{\frac{T_{\text{standard}}}{T_{\text{normal}}}}$$

D.11 External Fire Relief Requirements

D.11.1 General

D.11.1.1 Refer to Annex B for more information regarding the basis of the relief requirements for heat input due to external pool fire exposure.

Given the relief requirements, the vapor generation rate, W_{vap}, can be converted into an equivalent air flow as indicated in D.9.

This document is not an API Standard; it is under consideration within an API technical committee but has not received all approvals required to become an API Standard. It shall not be reproduced or circulated or quoted, in whole or in part, outside of API committee activities except with the approval of the Chairman of the committee having jurisdiction and staff of the API Standards Dept. Copyright API. All rights reserved.

The vapor mass generation rate due to heat input is determined by the following expression:

$$W_{\text{vap}} = \frac{Q \cdot F}{L_{\text{eff}}}\left(\frac{v_{\text{g}} - v_{\text{l}}}{v_{\text{g}}}\right) \tag{D.39}$$

where

W_{vap} is the vapor mass generation rate, expressed in kilograms per second (pounds per hour);

Q is the heat input due to external fire exposure, expressed in watts (British thermal units per hour);

F is the environment factor, dimensionless;

L_{eff} is the effective heat of vaporization at the relieving conditions in the tank, expressed in joules per kilogram (British thermal units per pound);

v_{l} is the specific volume of the boiling liquid at the relief conditions in the tank, expressed in cubic meters per kilogram (cubic feet per pound);

v_{g} is the specific volume of the vapor generated at the relief conditions in the tank, expressed in cubic meters per kilogram (cubic feet per pound).

D.11.2 The specific volume of vapor is much greater than the specific volume of liquid for fluids far from the thermodynamic critical point (which is typical for low-pressure tanks operating near ambient pressures); therefore, the volumetric correction factor is very close to 1 and is typically ignored, giving the simplified form as shown in Equation (D.40):

$$W_{\text{vap}} = \frac{Q \cdot F}{L_{\text{eff}}} \tag{D.40}$$

D.11.3 Equations (D.37) and (D.40) can be combined to yield Equation (D.41):

$$q_{\text{air}} = \left(\frac{x}{M_{\text{air}}} \cdot \sqrt{\frac{M_{\text{air}}}{T_{\text{air}}}}\right) \cdot \frac{Q \cdot F}{L_{\text{eff}}} \cdot \sqrt{\frac{T_{\text{i}}}{M}} \tag{D.41}$$

D.12 Derived Expressions for SI Units

For SI units, the following values and/or units are used, where “normal” conditions refer to 0 °C and 101.325 kPa.

$x = 22.414 \ \frac{\text{Nm}^3}{\text{kmol}}$

$M_{\text{air}} = 29$

$T_{\text{air}} = 273.15 \text{ K}$

$$q_{\text{air}} = \left(\frac{22.414}{29} \cdot \sqrt{\frac{29}{273.15}}\right) \cdot \frac{3600 \text{ s}}{1 \text{ h}} \cdot \frac{Q \cdot F}{L_{\text{eff}}} \cdot \sqrt{\frac{T_{\text{i}}}{M}} \tag{D.42}$$

BALLOT DRAFT

This document is not an API Standard; it is under consideration within an API technical committee but has not received all approvals required to become an API Standard. It shall not be reproduced or circulated or quoted, in whole or in part, outside of API committee activities except with the approval of the Chairman of the committee having jurisdiction and staff of the API Standards Dept. Copyright API. All rights reserved.

$$q_{\text{air}} = 906.6 \cdot \frac{Q \cdot F}{L_{\text{eff}}} \cdot \sqrt{\frac{T_{\text{i}}}{M}} \tag{D.43}$$

where q is calculated in equivalent normal cubic meters per hour of air.

D.13 Derived Expressions for USC Units

For USC units, the following values and/or units are used, where “standard” conditions refer to 60 °F and 14.696 psia:

$$x = 379.46 \frac{\text{SCF}}{\text{lb} \cdot \text{mol}}$$

$$M_{\text{air}} = 29$$

$$T_{\text{air}} = 519.67 \text{ °R}$$

$$q_{\text{air}} = \left(\frac{379.46}{29} \cdot \sqrt{\frac{29}{519.67}} \right) \cdot \frac{Q \cdot F}{L_{\text{eff}}} \cdot \sqrt{\frac{T_{\text{i}}}{M}} \tag{D.44}$$

$$q_{\text{air}} = (3.091) \cdot \frac{Q \cdot F}{L_{\text{eff}}} \cdot \sqrt{\frac{T_{\text{i}}}{M}} \tag{D.45}$$

where q is calculated in equivalent standard cubic feet per hour of air.

BALLOT DRAFT

This document is not an API Standard; it is under consideration within an API technical committee but has not received all approvals required to become an API Standard. It shall not be reproduced or circulated or quoted, in whole or in part, outside of API committee activities except with the approval of the Chairman of the committee having jurisdiction and staff of the API Standards Dept. Copyright API. All rights reserved.

Annex E
(informative)

Basis for Normal Out-breathing and Normal Inbreathing

E.1 Scope

This annex provides the boundary conditions that were established in developing the general method for calculating normal out-breathing and normal inbreathing as described in 4.3.2. This information is taken from Reference [20].

E.2 Boundary Conditions and Assumptions

The following boundary conditions and assumptions are used.

a) The tank is fully filled with vapor (no liquid is in the tank).

b) The heat flux (cooling) to the tank bottom is neglected.

c) Additional heat capacity of the tank other than wall is not considered.

d) Minimum wall thickness [as defined by DIN 4119 (all parts)] is assumed.

e) A minimum roof angle inclination of 15° for cone roofs is assumed.

f) The emission ratio for the wall radiation was conservatively based on data for dirty bronze aluminum paint ($\varepsilon_1 = \varepsilon_2 = 0.6$).

E.3 Approximations

The following approximations and assumptions are generally used to solve this complex problem.

a) The location-dependent temperature field of the tank wall and the tank atmosphere are defined by their average temperatures.

b) The dependence of the heat-transfer coefficient on the temperature difference is neglected; the alpha values are seen as constant.

c) The influence of the atmospheric pressure fluctuation is neglected as well as the fact that the vents start to relieve at a certain pressure differential.

E.4 Tank Heating Assumptions

Additional specific assumptions are made with regards to the heating of the tank, as follows.

a) The tank is filled only with air.

b) No liquid residue, which can evaporate during heat-up, is taken into account.

c) At the start, the environment, the tank wall and the tank contents are assumed to be in thermal equilibrium at a temperature of 15 °C.

BALLOT DRAFT

This document is not an API Standard; it is under consideration within an API technical committee but has not received all approvals required to become an API Standard. It shall not be reproduced or circulated or quoted, in whole or in part, outside of API committee activities except with the approval of the Chairman of the committee having jurisdiction and staff of the API Standards Dept. Copyright API. All rights reserved.

d) Free thermal convection takes place at the inner and outer areas of the tank. The heat-transfer coefficient is equal to 2 W/(m^2·K).

e) The sun radiation starts at an expected maximum value and remains constant.

f) The ambient temperature is seen as constant until the maximum volume flow is reached.

E.5 Tank Cooling Assumptions

Additional specific assumptions are made towards the cooling of the tank, as follows.

a) The tank is filled only with air.

b) At the start, the tank atmosphere and the tank wall are assumed to be in thermal equilibrium at a temperature of 55 °C, independent of the tank construction and volume.

c) Cooling by rain starts immediately and the rain continues with unchanged characteristics. For determining the inbreathing volume flow the following data are assumed:

- rain intensity: 225 kg/m^2·h;
- rain angle: 30°;
- rain water temperature: 15 °C;
- heat-transfer coefficient (rain to ambient): 15 W/(m^2·K).

d) Free thermal convection takes place at the inner area of the tank [the heat-transfer coefficient (wall to inside) is equal to 5 W/(m^2·K)] and film cooling takes place at the outer area of the tank with a heat-transfer coefficient of 5,000 W/(m^2·K).

e) A possible drift towards the average temperature of the tank atmosphere resulting from a mixing with cold ambient air is neglected.

BALLOT DRAFT

This document is not an API Standard; it is under consideration within an API technical committee but has not received all approvals required to become an API Standard. It shall not be reproduced or circulated or quoted, in whole or in part, outside of API committee activities except with the approval of the Chairman of the committee having jurisdiction and staff of the API Standards Dept. Copyright API. All rights reserved.

Annex F
(informative)

Guidance for inert-gas Blanketing of Tanks for Flashback Protection

F.1 General

This annex describes three tank inert-gas-blanketing design levels. All three levels provide comparable flashback protection. Level 1 has minimum inert-gas-blanketing requirements in combination with a specific flame-arrester classification. Level 2 has more stringent inert-gas-blanketing requirements with a different flame-arrester classification. Level 3 has the highest inert-gas-blanketing requirements with no flame arrester.

F.2 Tank Inbreathing

Tank inbreathing due to changes in weather and emptying of the tank is performed with inert gas. For the inert-gas supply, minimum values of available inert-gas volume flow, $\dot{V}_{\mathrm{I}}$, and the volume of reserve inert gas, V_{I}, are required. These rates shall be specified on the basis of a calculation of the maximum flow rates of normal out-breathing and inbreathing in accordance with 4.3.2, with a three-level classification being provided in conjunction with safety and monitoring devices. To determine the amount of reserve inert gas, the volume of the applicable parts in the piping system (i.e. up to the air separation unit) should be considered.

Calculate the required flow rates and volumes for the three inert-gas levels as follows.

a) For inert-gas-blanketing level 1, calculate the required flow rate $\dot{v}_{\mathrm{I}}$, expressed in cubic meters per hour, as given in Equation (F.1) and V_{I}, expressed in cubic meters, as given in Equation (F.2):

$$\dot{V}_{\mathrm{I}} = 0.1C \cdot R_{\mathrm{i}} V_{\mathrm{tk}}^{0.7} + \dot{V}_{\mathrm{pe}} \qquad \text{(F.1)}$$

where

C is a factor that depends on vapor pressure, average storage temperature and latitude (see Table 2);

R_{i} is the reduction factor for insulation;

R_{i} is 1 if no insulation is used;

R_{i} is R_{in} for fully insulated tanks [see Equation (11)];

R_{i} is R_{inp} for partially insulated tanks [see Equation (12)];

V_{tk} is the tank volume;

$\dot{V}_{\mathrm{pe}}$ is the maximum rate of liquid discharge.

$$V_{\mathrm{I}} = 0.04 \cdot V_{\mathrm{tk}} \qquad \text{(F.2)}$$

The inert-gas supply shall be monitored (i.e. measuring the tank pressure and measuring the oxygen concentration). An alarm shall be triggered when the set pressure of the vacuum vent is reached. At this level of inert-gas blanketing, the inside of the tank can be classified as zone 1 in accordance with IEC 60079-10. An

BALLOT DRAFT

This document is not an API Standard; it is under consideration within an API technical committee but has not received all approvals required to become an API Standard. It shall not be reproduced or circulated or quoted, in whole or in part, outside of API committee activities except with the approval of the Chairman of the committee having jurisdiction and staff of the API Standards Dept. Copyright API. All rights reserved.

end-of-line flame arrester that has been tested for atmospheric deflagration and endurance burning for IEC explosion group IIA (NEC Group D) vapors shall be installed.

b) For inert-gas-blanketing level 2, calculate the required flow rate $\dot{V}_{\mathrm{I}}$, expressed in cubic meters per hour, as given in Equation (F.3) and V_{I}, expressed in cubic meters, as given in Equation (F.4):

$$\dot{V}_{\mathrm{I}} = 0.2C \cdot R_{\mathrm{i}} V_{\mathrm{tk}}^{0.7} + \dot{V}_{\mathrm{pe}} \tag{F.3}$$

$$V_{\mathrm{I}} = 0.08 \cdot V_{\mathrm{tk}} \tag{F.4}$$

where the symbols are the same as for Equation (F.1).

The alarm specified under inert-gas stage 1 shall activate the shutdown of the liquid outflow. At this level of inert-gas blanketing, the inside of the tank can be classified as zone 2 in accordance with IEC 60079-10. An end-of-line flame arrester that has been tested for atmospheric deflagration for IEC explosion group IIA (NEC Group D) vapors shall be installed.

c) For inert-gas-blanketing level 3, calculate the required flow rate $\dot{V}_{\mathrm{I}}$, expressed in cubic meters per hour, as given in Equation (F.5) and V_{I}, expressed in cubic meters, as given in Equation (F.6):

$$\dot{V}_{\mathrm{I}} = 0.5C \cdot R_{\mathrm{i}} V_{\mathrm{tk}}^{0.7} + \dot{V}_{\mathrm{pe}} \tag{F.5}$$

$$V_{\mathrm{I}} = 0.12 \cdot V_{\mathrm{tk}} \tag{F.6}$$

where the symbols are the same as for Equation (F.1).

The tank pressure shall be kept above atmospheric pressure and the monitoring system shall have redundancy in the design. The inert-gas supply shall be kept above the tank pressure and, in particular, the required flow rate of $\dot{V}_{\mathrm{I}}$ shall be achieved with a tank pressure at least equal to the atmospheric pressure. The trip pressure at which the liquid outflow shuts down shall be set above atmospheric pressure. Alarms shall be triggered at the trip pressure (see Figure F.1). At this level of nitrogen blanketing, the inside of the tank can be classified as zone 2 in accordance with IEC 60079-10. At this level of inert-gas blanketing, no additional protection against flame propagation from the outside to the inside of the tank is required.

F.3 Common Inert-gas Supply

Where several tanks share a common inert-gas supply, the inert-gas requirement is calculated by aggregating the individual flow rate amounts as $\sum_j \dot{V}_{\mathrm{I},\,j}$ and aggregating the individual volumes as $\sum_j V_{\mathrm{I},\,j}$

If several tanks with common inert-gas supply are divided so that no single tank has a capacity exceeding 20 % of the total capacity of all tanks, the calculated values may be reduced by 50 %.

The expected normal consumption shall be taken into account in determining the overall capability of inert-gas delivery.

F.4 Interconnected Vapor Spaces

For tank-breathing systems where at least five tanks have their vapor spaces interconnected, it is not necessary to consider the pumping out, i.e. $\dot{V}_{\mathrm{pe}}$ may be ignored in Equations (F.1), (F.3) and (F.5) when calculating $\dot{V}_{\mathrm{I}}$.

BALLOT DRAFT

This document is not an API Standard; it is under consideration within an API technical committee but has not received all approvals required to become an API Standard. It shall not be reproduced or circulated or quoted, in whole or in part, outside of API committee activities except with the approval of the Chairman of the committee having jurisdiction and staff of the API Standards Dept. Copyright API. All rights reserved.

F.5 Location of Vacuum Vent

The vacuum vent should be located as close as practical to the inert-gas supply connection to the tank in order to minimize the oxygen concentration at the location where ambient air can enter the tank.

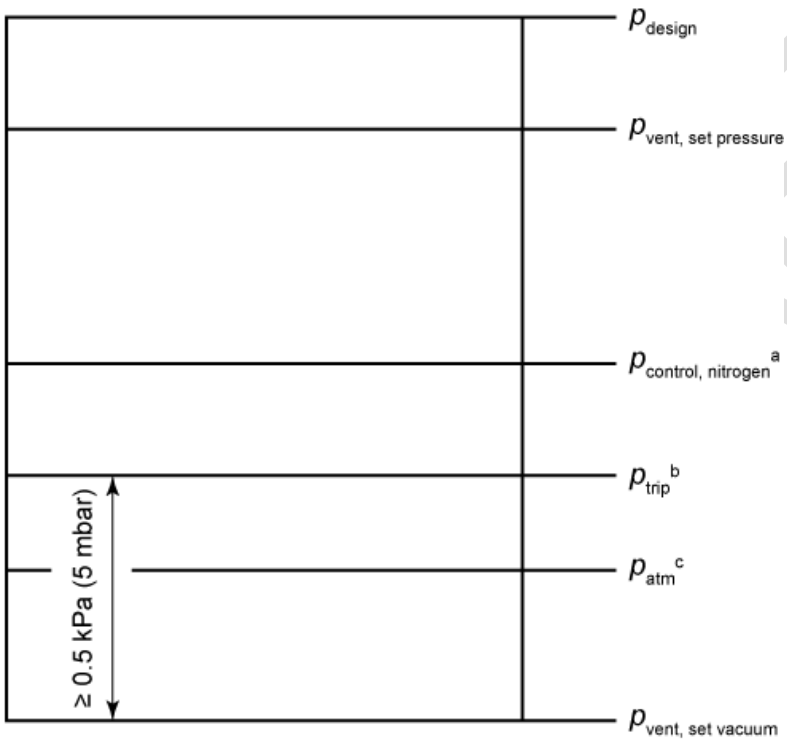

a Add nitrogen at this point.

b Pump shuts down.

c p_{atm} is the atmospheric pressure.

Figure F.1—Trip Pressure Diagram for Nitrogen Blanketing

BALLOT

This document is not an API Standard; it is under consideration within an API technical committee but has not received all approvals required to become an API Standard. It shall not be reproduced or circulated or quoted, in whole or in part, outside of API committee activities except with the approval of the Chairman of the committee having jurisdiction and staff of the API Standards Dept. Copyright API. All rights reserved.

Annex G
(informative)

Explanation of Differences in Thermal Inbreathing Using the General Method and Annex A Method

G.1 General

This standard presents two methods for calculating the thermal inbreathing flow rate for a storage tank: the general method (4.3.2.1) and the method in Annex A. This annex explains why the two methods can produce significantly different results.

G.2 Equations

The thermal inbreathing scenario is where a tank is suddenly cooled by rain. Equation (G.1) can be used to calculate the resulting thermal inbreathing

$$\dot{V} \cong -\frac{V_t}{T_0} \cdot \frac{dT}{dt} \tag{G.1}$$

where

V_t is the tank volume in m^3;

T_0 is the initial gas temperature in K;

dT/dt is the rate of temperature change of the tank's vapor space in K/h;

$\dot{V}$ is the ambient air inbreathing rate in m^3/h.

In order to calculate the inbreathing rate, one has to determine the rate of temperature change (dT/dt) of the tank's vapor space. This rate is calculated using Equation (G.2):

$$\frac{dT}{dt} = -\alpha \cdot \left(T - T_{wall}\right) \cdot \frac{1}{c_p \cdot \rho} \cdot \frac{Surface}{Volume} \tag{G.2}$$

where

α is the convective heat transfer coefficient in $W/m^2 \cdot K$ (typically 4 or 5 $W/m^2 \cdot K$);

T is the medium temperature, K;

T_{wall} is the temperature of the tank wall, K;

c_p the specific heat of the medium at constant pressure and temperature T;

ρ is the density of the medium;

Surface is the heat transfer area which is taken to be the tank overall surface area excluding the tank bottom, m^2,

Volume is the tank's vapor space volume (empty tank), m^3.

BALLOT DRAFT

This document is not an API Standard; it is under consideration within an API technical committee but has not received all approvals required to become an API Standard. It shall not be reproduced or circulated or quoted, in whole or in part, outside of API committee activities except with the approval of the Chairman of the committee having jurisdiction and staff of the API Standards Dept. Copyright API. All rights reserved.

Equation (G.2) shows that in addition to the heat transfer coefficient (α) and vapor space properties (ρ and c_p) the rate of temperature change (dT/dt) is influenced by the surface to volume ratio of a storage tank. As suggested by Equation (G.2), small tanks will cool down faster than large tanks. Table G.1, applicable to flat roof tanks, shows that small tanks have a much higher surface to volume ratio compared to large tanks. In the example shown in Table G.1, a small tank (811 m^3) has around 3.7 times larger surface to volume ratio than the largest tank (41,900 m^3). Furthermore, the S/V ratio is only slightly dependent on the height (H) to diameter (D) ratio. For conical roof tanks a similar relationship is applicable, as shown in Figure G.1.

Table G.1—Surface to Volume Ratio of Small, Medium, and Large Flat Roof Tanks

$$\left(\text{Volume} = \frac{\pi \cdot D^2}{4} \cdot H;\ \text{Surface} = \frac{\pi \cdot D^2}{4} + \pi \cdot D \cdot H\right)$$

V m^3	S/V for H/D = 2 m^{-1}	S/V for H/D = 0.2 m^{-1}
811	0.558	0.521
3,980	0.330	0.306
41,900	0.151	0.140

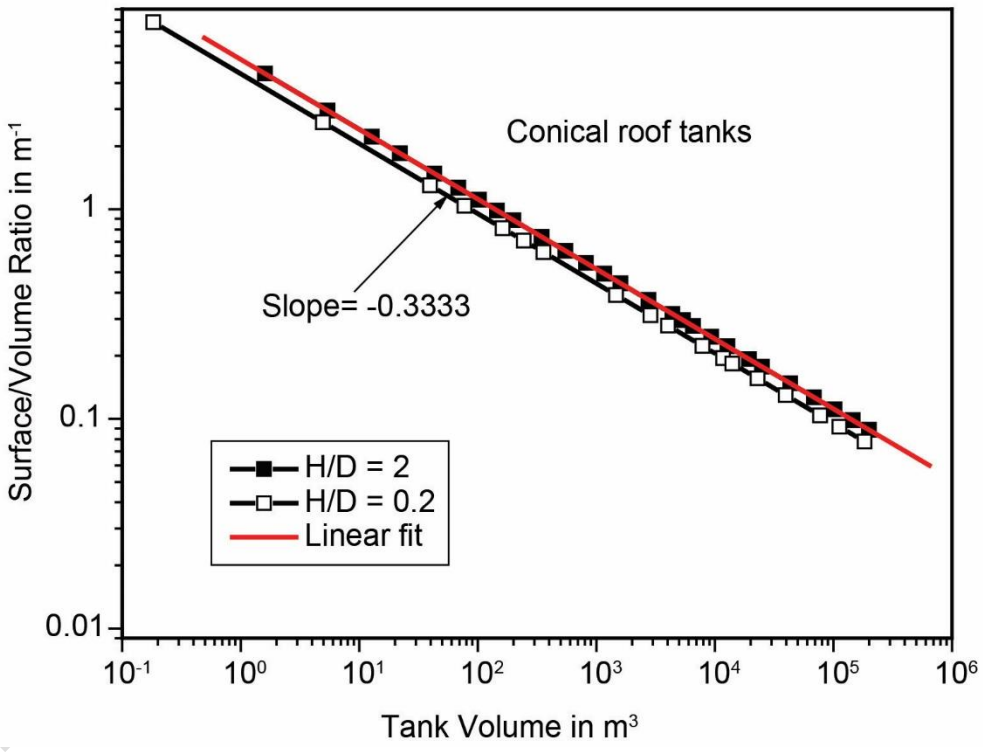

Figure G.1—Surface to Volume Ratio for Conical Roof Tanks

$$\text{Volume} = \frac{\pi \cdot D^2}{4} \cdot H + 0.02603 \cdot D^3;\ \ \text{Surface} = \pi \cdot \left(D \cdot H + 0.25434 \cdot D^2\right)$$

This document is not an API Standard; it is under consideration within an API technical committee but has not received all approvals required to become an API Standard. It shall not be reproduced or circulated or quoted, in whole or in part, outside of API committee activities except with the approval of the Chairman of the committee having jurisdiction and staff of the API Standards Dept. Copyright API. All rights reserved.

G.3 Assumptions

The specific assumptions used by the two methods are shown in Table G.2 (note that the Annex A method is split into two parts, small tanks and larger tanks).

Table G.2—Assumptions Used in the Annex A Method and General Method

Premises with Inbreathing Calculation	Annex A Method for Small Tank	Annex A Method for Large Tank	General Method
Tank size	<3,180 m^3	>3,180 m^3 and <30,000 m^3	All sizes
Initial temperature	48.9 °C (120 °F)	48.9 °C (120 °F)	55 °C (131 °F)
Rainwater temperature	15.6 °C (60 °F)	15.6 °C (60 °F)	15 °C (59 °F)
Free convection in tank (W/ m^2·K)	4	4	5
Maximum rate of temperature change	Assumed 56 °C/h (100 °F/h)	Estimated [a] 28 °C/h (50 °F/h)	Calculated [b]

[a] Assumed surface area of 30,000 m^3 tank at 48.9 °C with heat transfer rate of 63 W/m^2 (20 BTU/h·ft^2). Use results to interpolate inbreathing rates for tanks down to 3180 m^3.

[b] Based on 1/100 year rain storm on hot tank. Rain intensity of 225 kg/m^2·h (8.9 in./h).

G.4 Tank Vapor Space Temperature Change

The Annex A method uses an assumed constant rate of temperature change (dT/dt = 56 K/h) for small tanks (up to 3180 m^3 volume) and varying rate for tanks greater than 3180 m^3 but smaller than 30,000 m^3 (Annex A method is not applicable for tanks larger than 30,000 m^3). On the other hand, the rate of temperature change with the general method is based on detailed thermodynamic calculations.

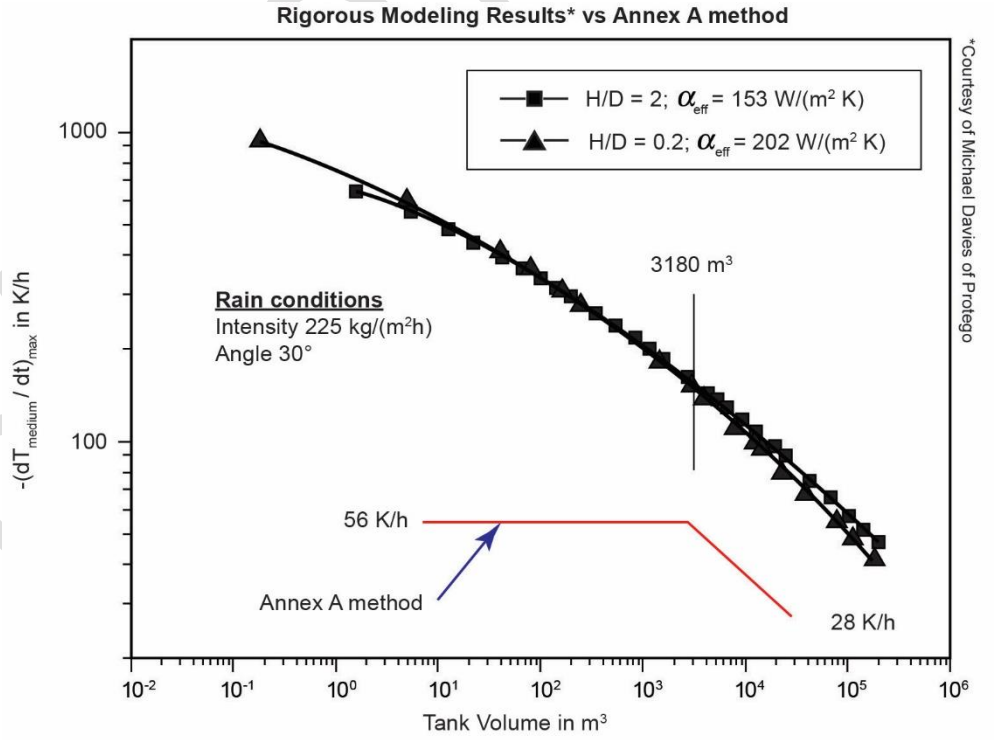

Figure G.2—Rate of Change of Tank Vapor Space Temperature Used in the Two Sizing Methods

This document is not an API Standard; it is under consideration within an API technical committee but has not received all approvals required to become an API Standard. It shall not be reproduced or circulated or quoted, in whole or in part, outside of API committee activities except with the approval of the Chairman of the committee having jurisdiction and staff of the API Standards Dept. Copyright API. All rights reserved.

The tank's thermal inbreathing varies with time. The maximum inbreathing rate occurs where the tank's vapor space temperature has the highest rate of change. This generally occurs a few minutes after start of the rain. Figure G.2 shows the maximum rate of temperature change for a range of tank volumes based on the two methods. The solid black lines correspond to the thermodynamic calculations (general method) performed for tanks with height/diameter ratios of 2 and 0.2. The maximum temperature change assumptions used in the Annex A method are shown in Figure G.2 with solid red lines. The difference in the predicted maximum temperature change is the primary reason why the general method results in higher inbreathing loads than the Annex A method.

The detailed thermodynamic results using the general method can be approximated by use of Equation (G.3) where C = 5. See Figure G.3.

$$\dot{V} = C \cdot V_t^{0.7} \tag{G.3}$$

This equation is what is specified in the general method.

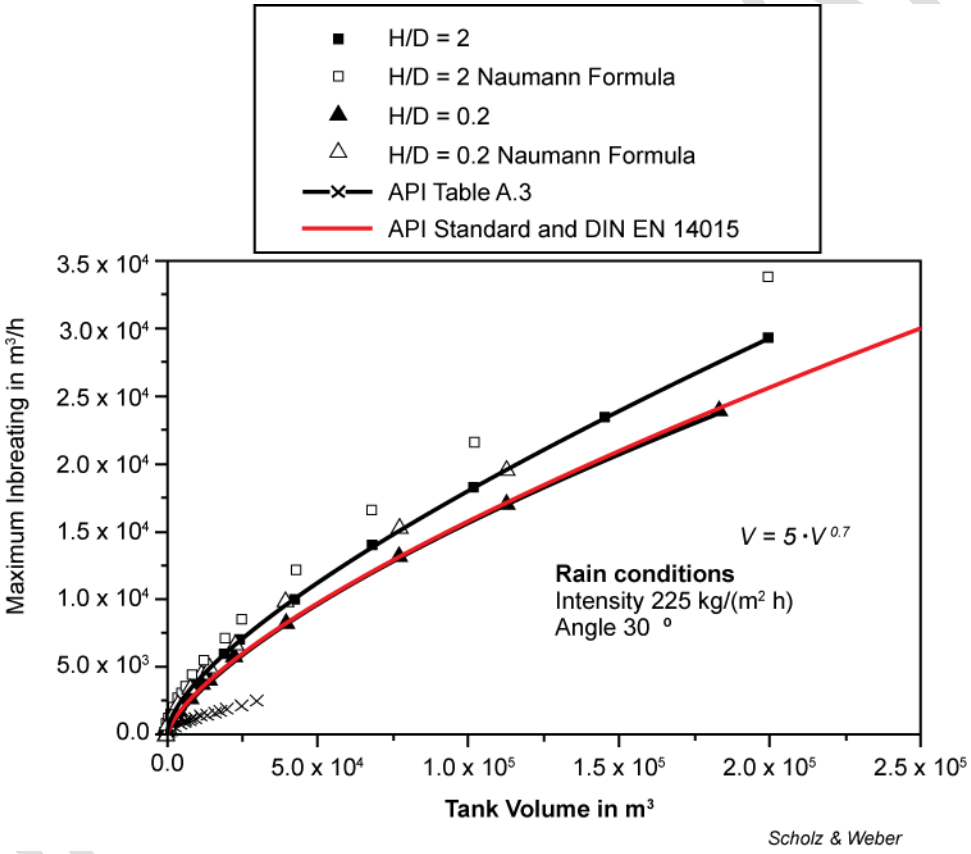

Figure G.3—Maximum Inbreathing for Various Tanks Sizes; Solid Black Lines—Thermodynamic Model; Solid Crosses—Annex A Method; Red Line $\dot{V} = 5 \cdot V^{0.7}$

G.5 Sensitivity Studies

Rain intensity is one of several significant factors in the calculation of thermal inbreathing. Calculations using the thermodynamic model show that rain intensity (with all other assumptions fixed) would need to be at least an order of magnitude lower than the specified 225 kg/hr/m^2 to approach inbreathing rates as estimated using the Annex A method. See Figure G.4.

This document is not an API Standard; it is under consideration within an API technical committee but has not received all approvals required to become an API Standard. It shall not be reproduced or circulated or quoted, in whole or in part, outside of API committee activities except with the approval of the Chairman of the committee having jurisdiction and staff of the API Standards Dept. Copyright API. All rights reserved.

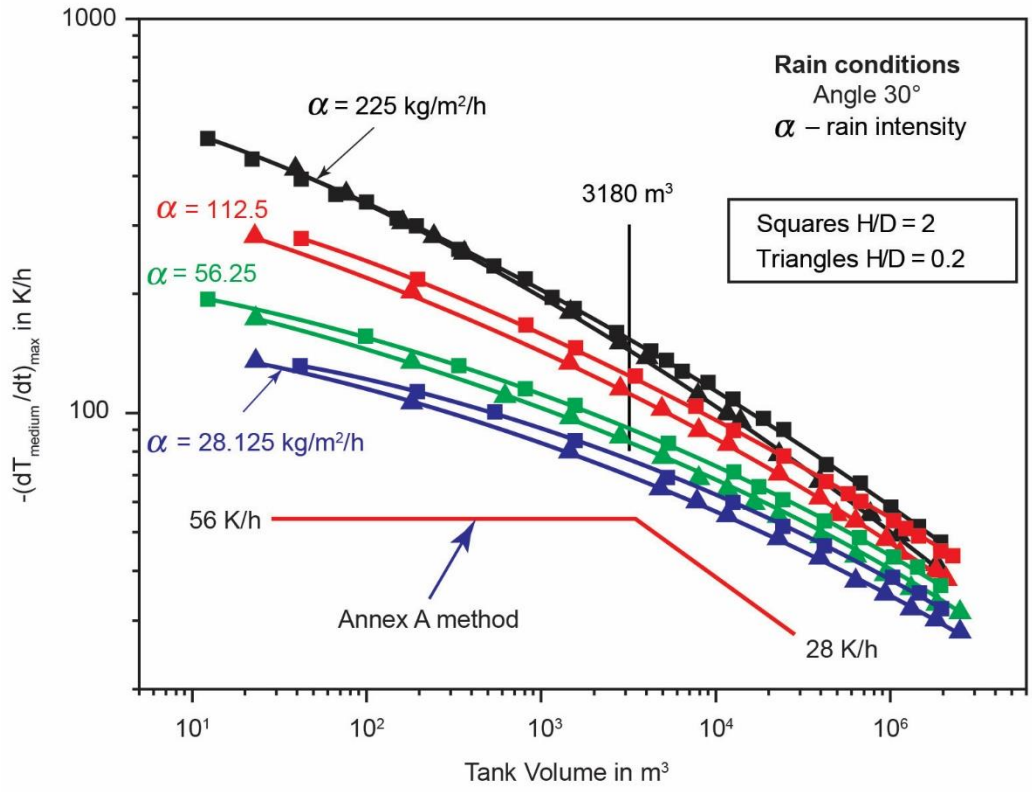

Figure G.4—Rate of Change of Tank Vapor Space Temperature vs Rain Intensity

BALLOT

This document is not an API Standard; it is under consideration within an API technical committee but has not received all approvals required to become an API Standard. It shall not be reproduced or circulated or quoted, in whole or in part, outside of API committee activities except with the approval of the Chairman of the committee having jurisdiction and staff of the API Standards Dept. Copyright API. All rights reserved.

Annex H
(informative)

Flame Arresters for Tank Vents

H.1 Scope

This annex covers flame arresters on vents for storage tanks within the scope of API 2000. These flame arrester devices are installed in the storage tank venting systems, often in combination with pressure vacuum valves or by themselves.

The end user should consult the flame arrester manufacturer for specific flame arresting performance for a given device and application.

H.2 Introduction

This annex replaces API RP 2210.

Atmospheric fixed-roof tanks typically have a vent nozzle and venting system that allows escape or entry of air and/or vapors to protect from overpressure or vacuum conditions. This annex discusses the benefits, disadvantages, and considerations associated with the use of flame arresters with tank venting systems.

It is the user's responsibility to determine if the provisions in this annex are used for new and/or existing tanks.

NFPA 30, Flammable and Combustible Liquids Code, lists requirements for tank vents in which flammable and combustible liquids are stored. This standard and NFPA 30 cover the size and venting capacity to accommodate normal and emergency conditions of the tanks. Pressure Vacuum (PV) valves are normally required for flammable liquids (see NFPA 30). Under certain circumstances, flame arresters certified or approved by an independent testing laboratory according to one of the enumerated flame arrester approval standards are used in conjunction with, or in lieu of, a pressure-vacuum valve. The publications cited in the "Type-Testing and Certification" section of this Annex are considered internationally recognized standards and may be considered mandatory standards in some jurisdictions.

H.3 Flame Arrester Background

The term flame arrester describes a device that will allow free passage of a gas or gaseous mixture but will interrupt or prevent the passage of flame. It prevents the transmission of flame through a flammable gas/ air mixture by quenching the flame on the large surface area provided by an array of small passages through which the gases and flame pass. The emerging gases are cooled enough to prevent flame transmission through the device. Effective and reliable flame arresting devices are designed for many specific situations, and tested according to internationally recognized standards as listed in H.4.

Arresters have been made incorporating wire screens, sintered meshes, small metal tubes, controlled porous media, drilled holes, liquid seal, or passages between interleaved corrugated and flat sheets of metal for use on tanks storing gasoline and similar flammable liquids. The metal screen in the coal miners' Davy safety lamp and the tiny passages in the sintered metal powder device in a combustible gas indicator are examples of flame-arresting devices.

BALLOT DRAFT

This document is not an API Standard; it is under consideration within an API technical committee but has not received all approvals required to become an API Standard. It shall not be reproduced or circulated or quoted, in whole or in part, outside of API committee activities except with the approval of the Chairman of the committee having jurisdiction and staff of the API Standards Dept. Copyright API. All rights reserved.

H.4 Flame Arrester Testing and Certification

H.4.1 Intro to Testing

Testing of flame arresters is critical to the safe design, operation, and application of flame arresters. Flame arrester design is heavily dependent upon the test methods used to evaluate and validate the arrester performance and establish the arrester application limitations. Because of this fact, it is critical that arresters be tested to agreed-upon conditions, established by recognized and thorough flame arrester testing standards. Some examples of these standards are listed in the "Type-Testing and Certification" section of this Annex.

The goal of flame arrester testing and certification is to test the arrester under standard-defined "worst-case" conditions and establish the safe working-limits of a given flame arrester model and size. Once such limits have been established by the manufacturer, the arrester should be installed, operated, and maintained within the manufacturer's stated limitations. If the arrester is installed outside of the allowable operating limitations established through testing, the arrester may be ineffective in stopping the flame transmission. For example, installing the arrester with a pipe extension on the atmospheric side of the arrester that is longer than the extension used in the certification tests (for a deflagration arrester), disqualifies the certification performance results for that installation. For other vapors or explosive gas groups with MESG's (Maximum Experimental Safe Gap) outside of what was tested and for installations that do not conform to the arrangement described in the certification, the arrester may be ineffective in stopping the flame transmission.

H.4.2 Type-Testing & Certification

Flame arrester certifications are based on tests made with standard-defined mixtures of hydrocarbon vapor and air of maximum explosiveness with prescribed limitations on the installation.

Type-testing and certification is acquired when a specific flame arrester model and size range is tested and certified according to a flame arrester standard by an independent testing laboratory or entity to be safe for use within a given set of application limitations.

This certification process generally consists of a manufacturer submitting test samples of a specific flame arrester model and size to an independent testing laboratory for testing and certification, against a specific flame arrester testing standard. If the flame arrester model "passes" testing at the required performance parameters, the independent testing laboratory and/or notifying body can then issue a certification letter stating that a given flame arrester model is certified. After certification, the flame arrester manufacturer is required to produce that specific certified model within the tolerance and manufacturing limitations of the original type-tested "locked design", which was flame tested for certification.

If certification or listing is required, flame arrester devices should be certified to one or more of the most recent edition or revision of the following (or equivalent) standards:

- ASTM F1273 – Standard Specification for Tank Vent Flame Arresters
- ASTM F3386/F3386M-21 – Standard Specification for Detonation Flame Arresters
- FM 6061 – Approval Standard for Flame Arresters (2013 and later)
- IMO MSC/Circ. 677 – Revised standards for the design, testing and locating of devices to prevent the passage of flame into cargo tanks in tankers
- ISO/IEC 80079-49 / ISO 16852 / EN 12874 – Flame Arresters: Performance requirements, test methods and limits for use (Qualifies ATEX Certification)
- UL 525 – Standard for Flame Arresters
- USCG 33 CFR 154, App. B – USCG Standard Specification For Tank Vent Flame Arresters

In addition to the above certification / testing standards, the most recent edition or revision of each of the following standards, codes, and publications are referenced in this annex as useful sources of additional information supplementary to the text:

BALLOT DRAFT

This document is not an API Standard; it is under consideration within an API technical committee but has not received all approvals required to become an API Standard. It shall not be reproduced or circulated or quoted, in whole or in part, outside of API committee activities except with the approval of the Chairman of the committee having jurisdiction and staff of the API Standards Dept. Copyright API. All rights reserved.

- API RP 2028 – Flame Arresters in Piping Systems
- NFPA 30 – Flammable and Combustible Liquids Code
- NFPA 69, Annex F – Standard on Explosion Prevention Systems
- OSHA 1910.106(b)(2)(iv)(f); 1910.106(b)(2)(iv)(g) – OSHA Requirements for storing Category 1, 2, and 3 flammable liquids, in relation to PVRV's and flame arresters
- TRbF 20 – Technische Regeln für brennbare Flüssigkeiten
- TRGS 509 – Lagern von flüssigen und festen Gefahrstoffen in ortsfesten Behältern sowie Füll- und Entleerstellen für ortsbewegliche Behälter

H.4.3 Parameters for Selecting a Flame Arrester Testing Standard

Local regulatory requirements for specific testing standards / certifications can be in place. A flame arrester testing standard should clearly define the testing parameters which will be used for the testing of flame arrester devices. The defined test parameters should include, but are not limited to:

a) Flame Arrester Classification: end-of-line deflagration, in-line deflagration, pre-volume deflagration, in-line stable detonation, in-line unstable detonation, end-of-line stable detonation, etc... Different standards have different ways of classifying the arrester types;
b) Gas Concentration Ratios in-air to be used for flame transmission testing and/or stabilized burning testing;
c) Explosive gas group rating which defines the smallest process vapor MESG (Maximum Experimental Safe Gap) allowable for a given flame arrester to be applied within. See Figure H.1 for an example of how a IIB3 rated flame arrester can be applied for a given process vapor MESG range;
d) Installation limitations based upon the type-testing results and certification;
e) Maximum Pre-Ignition Pressure;
f) Stabilized burning test parameters, for determining the maximum short-time burn time and/or endurance burning rating for preventing flame propagation from a flame stabilized on the element surface;
g) Temperature limitations for the tested arrester;
h) Test device orientation (in-line, end-of-line), any allowable pipe fittings (bends, valves, expander/reducers, etc), and maximum run-up length in-between the arrester device and the potential ignition source;
i) Testing quantity and sequence for establishing flame-transmission "type-testing" protection.

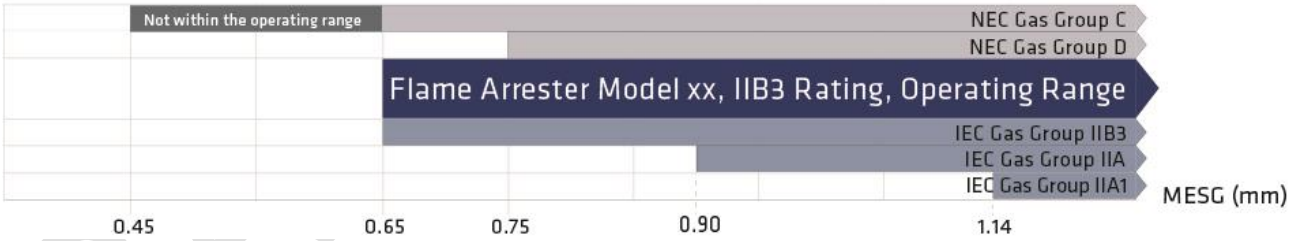

Figure H.1 – Example: Arrester Acceptable MESG Operating Range vs. Explosive Gas Groupings

H.5 Application of Flame Arresters

H.5.1 Safe Flame Arrester Application

Only tested flame arrester designs should be used. It is not advisable to rely upon, or use, untested flame arrester designs, as specified in API RP 2028, 3rd Edition - Section 7.5.

Correct application of a flame arrester is critical to an effective flame arrester installation. A flame arrester is only effective if applied correctly within the specific flame arrester performance limitations. The end user should consult the flame arrester manufacturer for specific flame arresting performance limitations for a given device

This document is not an API Standard; it is under consideration within an API technical committee but has not received all approvals required to become an API Standard. It shall not be reproduced or circulated or quoted, in whole or in part, outside of API committee activities except with the approval of the Chairman of the committee having jurisdiction and staff of the API Standards Dept. Copyright API. All rights reserved.

and application. Safe application begins with working with the flame arrester manufacturer, to specify the correct arrester for a given application, and to properly install and maintain a device within that given application.

If a flame arrester is certified to a particular standard, then the arrester's application limitations are governed by the particular standard and/or certification.

When consulting with the manufacturer about specifying an arrester for a specific installation, the following application factors are a good starting point, but not limited to:

a) Process Parameters:
   1) Explosive gas group rating required by process (IIA1, IIA, IIB3, etc…);
   2) Oxygen Concentration: is there an increased oxygen concentration beyond typical air concentration;
   3) Maximum Pre-Ignition Pressure required by process: the maximum pressure at which the flame arrester is expected to prevent a flame propagation through the device;
   4) Stabilized Burning Risk: potential risk of continuous flow of flammable vapor mixture through the device, which could lead to a stabilized flame burning on the arrester element;
   5) Process Vapor Cleanliness: potential paraffins / other deposits which could build up on / or cause plugging of arrester element, and developing appropriate maintenance plan;
   6) Process vapor temperature range;
   7) Proximity to heat sources (thermal oxidizers, etc), which could cause the flame arrester temperature to be elevated, which could negatively impact the flame arrester performance;
   8) Appropriate Material Selection: for chemical compatibility with the process media and installation location, so as to mitigate corrosion which could negatively impact the flame arresting performance and / or structural integrity of the arrester;
   9) Potential liquid drop-out from process, and proper mitigation.

b) Device Installation Parameters:
   1) Installation type (in-line, end-of-line);
   2) Arrester Classification Type (deflagration, stable detonation, unstable detonation);
   3) Any pipe fittings (bends, valves, expander/reducers, etc);
   4) Inlet/outlet size piping, and any expansions/reductions on piping within a given 120 times the pipe diameter distance;
   5) Run-up length in-between the arrester device and the potential ignition source (important for in-line deflagration arresters).

c) Arrester sizing, to achieve needed flow at a given pressure drop;
d) Establish regulatory requirements, if any, and appropriate testing / certification(s);
e) Installation limitations based upon the type-testing results and certification;
f) Documentation: Documentation such as flame arrester specification sheets, flow curve, testing certificates, material test reports, etc. should be included in the final documentation. Flame arrester final documentation should be retained within site Process Safety Information system of record.

H.5.2 Potential Issues Encountered with Flame Arrester Application

H.5.2.1 General

Potential issues with application and maintenance of tank flame arresters follow. If it is determined that any of the below application issues pose a significant risk that cannot be properly mitigated, other measures of explosion prevention may be evaluated. Refer to 4.5.2 for alternative design options for explosion prevention.

H.5.2.2 Reduced Flow and Clogging

The tank vapor passes through the arrester's narrow passageways causing a frictional pressure loss that may reduce the flow capacity below that of an open pipe or a vent pipe with a pressure-vacuum valve of comparable size. Thus, the pressure drop should be accounted for when selecting a flame

BALLOT DRAFT

This document is not an API Standard; it is under consideration within an API technical committee but has not received all approvals required to become an API Standard. It shall not be reproduced or circulated or quoted, in whole or in part, outside of API committee activities except with the approval of the Chairman of the committee having jurisdiction and staff of the API Standards Dept. Copyright API. All rights reserved.

arrester. Narrow passages can clog with dust, scale, polymers, or airborne debris. The owner should take into consideration potential clogging of the arrester, and take appropriate actions to monitor, maintain, mitigate, or size the system accordingly.

H.5.2.3 Ice Development within Arrester

The water bottoms of certain petroleum tanks produce high humidity in the vapor space. Ice can accumulate and clog the arrester in freezing weather and jeopardize the tank due to excessive vacuum or pressure. External environmental icing conditions can also cause arrester plugging. To remedy a blockage due to icing, the arrester is commonly heated or removed. Since removal would nullify the protection for which the arrester was installed, heat tracing or steam jacketing may be required. However, the manufacturer should be consulted about the proper use of heat tracing, as this could potentially negatively affect the arrester flame-arresting performance.

H.5.2.4 Damaging Arrester During Maintenance and Inspection

The need for periodic inspecting and cleaning affords opportunities for errors in reassembly or damage to the arrester element, possibly making the arrester incapable of stopping the flame. Proper maintenance schedules and methods, consistent with the manufacturer's operation manual, should be used.

H.5.2.5 Flame Burn Through During Extended Burning

A certified flame arrester may not prevent a long duration flame from propagating through the device. Arresters are tested / certified for a given rated burn time (given in minutes or endurance-rated) during which they will prevent a stabilized flame from burning through the device and propagating through the flame arrester. If a flammable mixture is allowed to burn for an extended period of time (exceeding the rated burn time of the device) at the flame arrester, the flame will propagate through the device once enough heat builds up within the arrester.

Arresters prevent flame propagation by cooling the air/gas mixture to a point below the auto ignition temperature (AIT), and once the arrester element reaches a high-enough temperature on the "protected side" (the side of the arrester opposite to the approaching flame front which the arrester is designed to "protect" from flame propagation) of the device (when AIT is reached), the flame will propagate through the arrester. In addition, high heat applied to the arrester for extended burn times (exceeding the rated burn time) can cause heat-induced damage which may render the device incapable of preventing flame propagation. The standards enumerated in the "Type Testing & Certification" section include either a short-time burn test and/or an endurance burning test specification to test flashback potential under extended burning conditions.

If there is risk of a continuous flow of flammable vapors through the flame arrester device after ignition, then the rated burn-time should be accounted for:

- If the flow of explosive vapors can be stopped within a stated short time limit (often considered between 1 to 30 minutes – see ISO/IEC 80079-49 and ISO 16852, Section 5.2), then short-time burn rated arresters can be evaluated for potential application within the given arrester certification limitations.
- However, if the vapor flow cannot be stopped within a rated timeframe, then endurance-burn rated arresters should be used.

Flame arrester testing and certification standards define endurance burning and short-time burning differently. The user should consult the specific flame arrester testing/certification standard and manufacturer when looking for a specific burn-through protection rating.

BALLOT DRAFT

This document is not an API Standard; it is under consideration within an API technical committee but has not received all approvals required to become an API Standard. It shall not be reproduced or circulated or quoted, in whole or in part, outside of API committee activities except with the approval of the Chairman of the committee having jurisdiction and staff of the API Standards Dept. Copyright API. All rights reserved.

H.5.2.6 Maintenance Access of Arresters

Safe flame arrester maintenance access should be provided. Lack of safe access to flame arresters can potentially lead to maintenance not being performed and/or personnel safety concerns during such activities.

H.6 Summary

H.6.1 Evaluate Flammable Atmosphere Flame Propagation Risk

Protecting a tank vent from flame flashback is based on the theoretical potential for a simultaneous occurrence of an ignition source in the vicinity of the vent and the release of flammable vapors of sufficient quantity to create a flammable mixture from the tank vent. Refer to 4.5.2 (C) for information on mitigating flame propagation risk.

H.6.2 Evaluate Ignition Source Risk

Ignition sources such as open flames usually are, and certainly can be, excluded from the vicinity of tank vents. Falling embers, unless actually flaming, are not an ignition source for petroleum vapors. Lightning is a potential ignition source as demonstrated by the occasional ignition of vent stacks that release vapor continuously.

H.6.3 Evaluate Certification Requirements

If a flame arrester is determined to be used, consideration should be taken regarding which (if any) flame arrester testing / flame arrester certification will be required to assist in safely applying the flame arrester within a given end-use application.

H.6.4 Evaluate Application Suitability of a Flame Arrester

If a flame arrester is determined to be used, the user should evaluate the specific application with the flame arrester device manufacturer.

BALLOT DRAFT

This document is not an API Standard; it is under consideration within an API technical committee but has not received all approvals required to become an API Standard. It shall not be reproduced or circulated or quoted, in whole or in part, outside of API committee activities except with the approval of the Chairman of the committee having jurisdiction and staff of the API Standards Dept. Copyright API. All rights reserved.

Bibliography

[1] EN 1127-1 [1], *Explosive atmospheres—Explosion prevention and protection—Part 1: Basic concepts and methodology*

[2] EN 13616, *Overfill prevention devices for static tanks for liquid petroleum fuels*

[3] API Recommended Practice 520, *Sizing, Selection, and Installation of Pressure-relieving Devices in Refineries—Part I: Sizing and Selection*

[4] API Standard 521, *Guide for Pressure-relieving and Depressuring Systems*

[5] API Recommended Practice 576, *Inspection of Pressure-relieving Devices*

[6] API Standard 620, *Design and Construction of Large, Welded, Low-pressure Storage Tanks*, Eleventh Edition

[7] API Standard 650:2007, *Welded Steel Tanks for Oil Storage*, Eleventh Edition

[8] API Recommended Practice 2210, *Flame Arresters for Vents of Tanks Storing Petroleum Products*

[9] API Recommended Practice 2350, *Overfill Protection for Petroleum Storage Tanks*

[10] API Standard 2510, *Design and construction of liquefied petroleum gas installations (LPG)*

[11] API 2521, *Use of Pressure-vacuum Vent Valves for Atmospheric Loss*

[12] ASME PTC 25 [2], *Pressure Relief Devices*

[13] NFPA 30 [3], *Flammable and Combustible Liquids Code*

[14] NFPA 59A, *Standard for the Production, Storage, and Handling of Liquefied Natural Gas (LNG)*

[15] NFPA 69, *Explosion Prevention Systems*

[16] TRbF 20 [4], *Technische Regeln fuer brennbare Fluessigkeiten, Laeger*

[17] UL 525 [5], *Flame arresters*

[18] USCG 33 *CFR* 154 [6], *Facilities transferring oil or hazardous material in bulk*

[19] Kletz, T. A., *What went wrong? Case studies of process plant disasters,* ISBN 0-88415-027-5

[20] Foerster, H., K. Schampel, and H. Steen, "Atmungsvorgänge infolge von Witterungseinflüssen an Lagertanks für brennbare Flüssigkeiten," *Physikalisch Technische Bundesanstalt* (*PTB*) *Bericht W-22*

---

1 European Committee for Standardization, Avenue Marnix 17, B-1000 Brussels, Belgium, www.cen.eu.

2 ASME International, 3 Park Avenue, New York, New York 10016-5990, www.asme.org.

3 National Fire Protection Association, 1 Batterymarch Park, Quincy, Massachusetts 02169-7471, www.nfpa.org.

4 Carl Heymanns Verlag KG, Luxemburger Strasse 449, D-50939 Cologne, Germany.

5 Underwriters Laboratories Inc., 333 Pfingsten Road, Northbrook, Illinois 60062-2096.

6 U.S. Government Printing Office, 732 N. Capitol Street NW, Washington, DC 20401.

BALLOT DRAFT

This document is not an API Standard; it is under consideration within an API technical committee but has not received all approvals required to become an API Standard. It shall not be reproduced or circulated or quoted, in whole or in part, outside of API committee activities except with the approval of the Chairman of the committee having jurisdiction and staff of the API Standards Dept. Copyright API. All rights reserved.

[21] Goßlau, W., E. Müller, and R. Weyl, "Tanklagertechnik—Festigkeit und Beatmung," *Mitteilung aus der BASF-Eigenüberwachung*, Ludwigshafen/Rhein, Sonderdruck aus TÜ 01/1985 und 05—09/1985

[22] Heidermann, T., "Flame Transmission Test with P/V Valves—Atmospheric deflagration and burning tests," *PROTEGO Test Report VB 03/1114-1*, 2007

[23] EN 13237, *Potentially explosive atmospheres—Terms and definitions for equipment and protective systems intended for use in potentially explosive atmospheres*

[24] NFPA 68, *Standard on Explosion Protection by Deflagration Venting*

[25] FM 6061 [7], *FMRC Approval Standard for Flame Arresters (2013 and later)*

[26] EN 1473, *Installation and equipment for liquefied natural gas—Design of onshore installations*

[27] API Recommended Practice 500*, Recommended Practice for Classification of Locations for Electrical Installations at Petroleum Facilities Classified as Class I, Division I and Division 2*

[28] API 2000, *Venting Atmospheric and Low-pressure Storage Tanks: Nonrefrigerated and Refrigerated*, First Edition

[29] EN 14620 (all parts), *Design and manufacture of site built, vertical, cylindrical, flat-bottomed steel tanks for the storage of refrigerated, liquified gases with operating temperatures between 0 °C and –165 °C*

[30] ISO 16852 [8], *Flame arresters—Performance requirements, test methods and limits for use*

[31] IEC 60079-10 [9], *Electrical apparatus for explosive gas atmospheres—Part 10: Classification of hazardous areas*

[32] API Standard 625, *Tank Systems for Refrigerated Liquefied Gas Storage*

[33] API Publication 937, *Evaluation of Design Criteria for Storage Tanks with Frangible Roof Joints*

[34] ISO 4126-4, *Safety devices for protection against excessive pressure - Part 4: Pilot operated safety valves*

[35] API Recommended Practice 2028, *Flame Arresters in Piping Systems*

[36] ASTM F3386/F3386M-21, *Standard Specification for Detonation Flame Arresters*

[37] ISO/IEC 80079-49, *Explosive atmospheres - Part 49: Flame arresters — Performance requirements, test methods and limits for use*

[38] TRGS 509, *Lagern von flüssigen und festen Gefahrstoffen in ortsfesten Behältern sowie Füll- und Entleerstellen für ortsbewegliche Behälter*

BALLOT DRAFT

---

7 FM Global, 1151 Boston-Providence Turnpike, P.O. Box 9102, Norwood, Massachusetts 02062, www.fmglobal.com.

8 International Organization for Standardization, 1, ch. de la Voie-Creuse, Case postale 56, CH-1211 Geneva 20, Switzerland, www.iso.org.

9 International Electrotechnical Commission, 3, rue de Varembé, P.O. Box 131, CH-1211 Geneva 20, Switzerland, www.iec.ch.